WIRE DIAGRAM FOR MODEL: CMA-180 VL- FL
WITH OPTIONAL DOOR SAFETY INTERLOCK (DSI)

CMA DISHMACHINES
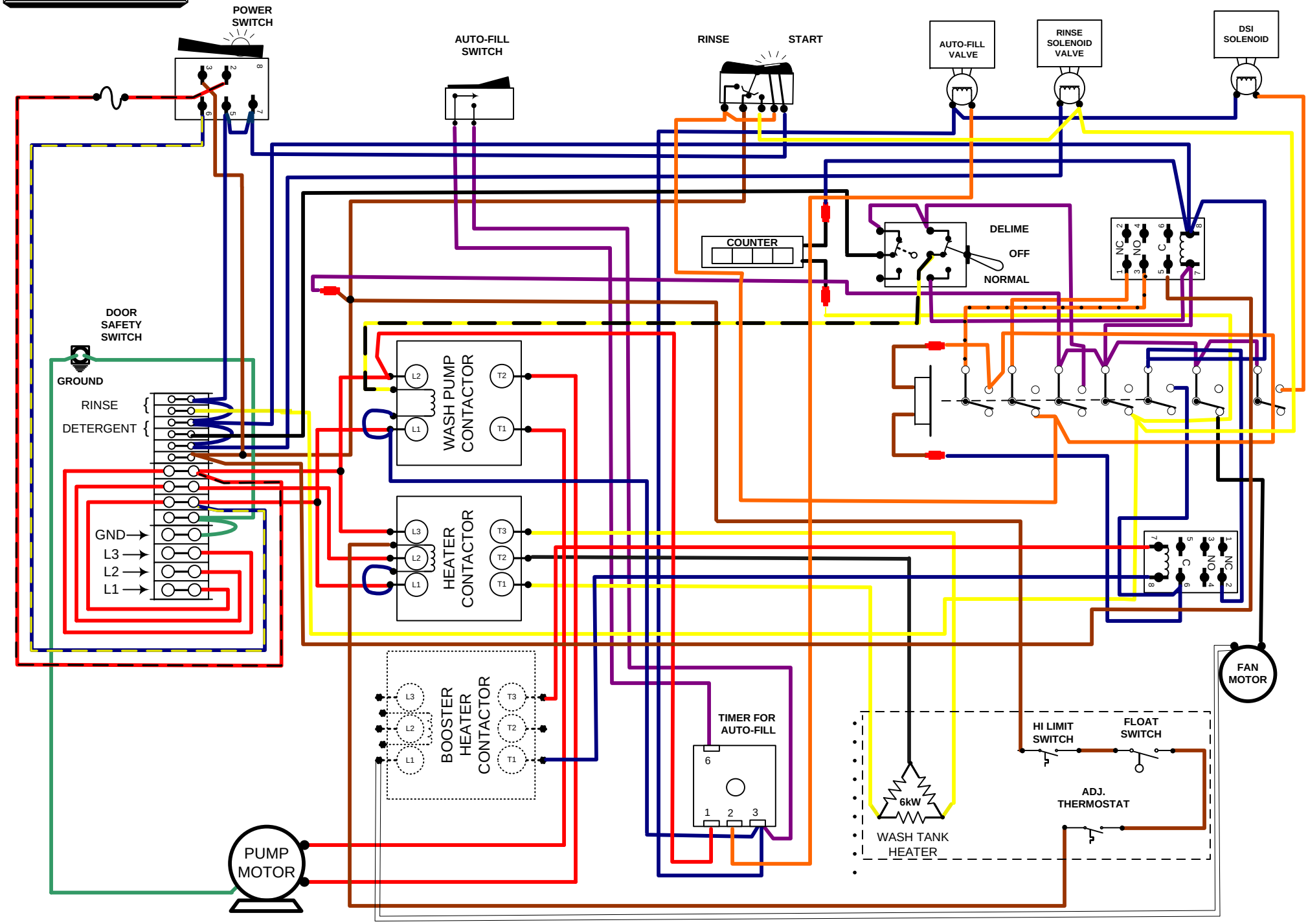
Rev. 2.00
06/07/2019