CMA DISHMACHINES

REV. 1.00
11/14/02
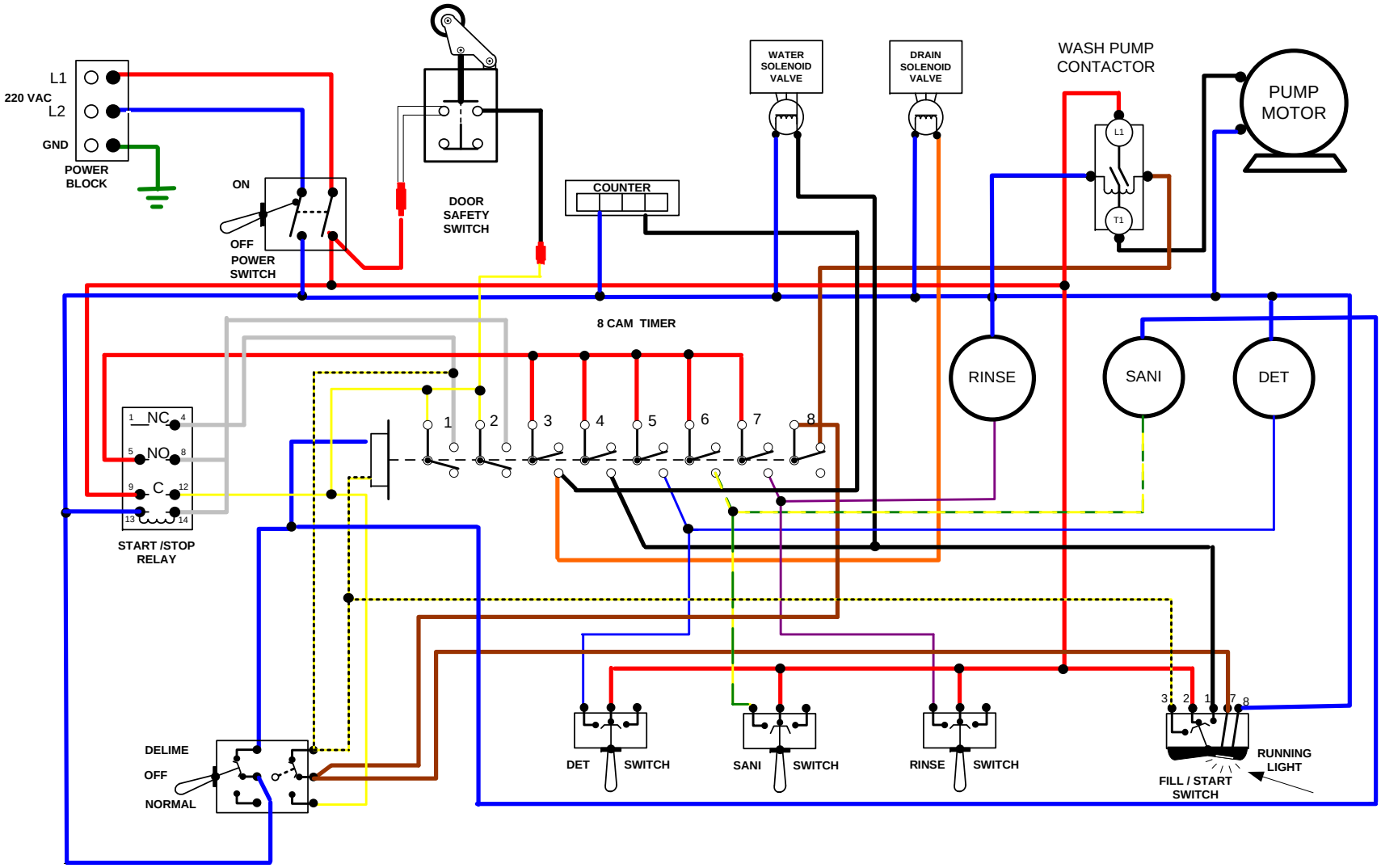
WIRE DIAGRAM FOR MODELS : AH,C,S 220/240V 50/60 HZ