MODELS CMA-180 VL/180 VLTall
PARTS MANUAL
Rev 2.04 08-23-21

CMA DISHMACHINES
12700 KNOTT AVENUE
GARDEN GROVE, CALIFORNIA 92841

800-854-6417

FAX 714-895-2141

www.cmadishmachines.com

Buy Parts

TABLE OF CONTENTS

MODEL CMA-180 VL

1. PARTS MANUAL 3

1.1. INITIAL PARTS KIT #1100.16 3

1.2. EXPLODED VIEW DRAWINGS 4

1.2.1. Straight Frame System Assembly 4

1.2.2. Heat Recovery System 5

1.2.3. Drain System Assembly (Ventless Unit) 6

1.2.4. Plumbing System Assembly ..... 7&8

1.2.5. Wash Spray System 9

1.2.6. Final Rinse System Assembly 10

1.2.7. CMA-180 Door Handle Assembly 11

1.2.8. Pump System Assembly 12

1.2.9. Wash Tank Heater (Triangular Flange) 13

1.2.10. Booster Tank Heater (Triangular Flange) 14

1.2.11. Control Box Assembly 15

1.2.12. Heat Recovery System Control Box 16

1.2.13. Heat Recovery System Control Box 480V 17

1.2.14. Door Safety Interlock (DSI) Assembly P/N 17712.84 18

1.2.15. Unique Parts For CMA-180VL-T 19

1.2.16. Unique Parts for CMA-180T Split Door 20

1.2.17. Water Tempering Kit (Optional) 21

1. Parts Manual

1.1. Initial Parts Kit #1100.16

P/N	DESCRIPTION	Qty
00121.17	CMA-180 Drain Stopper	1
00200.10	Pump Assy. 115/220V 60Hz (Open)	1
00206.30	Pump Seal Kit	1
00304.29	Rinse Arm w/ Bearings	1
00307.20	Spray Arm Assy w/bearing & end plugs	1
00363.00	Spray Base Pull Lock Pin	1
00404.85	Contactor 208/240V 20 Amp	1
00409.93	CMA-180VL Timer Assy	1
00411.00	Micro Switch	1
00421.78	Illuminated Plug CMA-180/44 P	1
00421.89	Rocker Switch Auto Fill	1
00421.90	Power Switch Red 250V	1
00475.70	Toggle Switch DPDT 15 Amp/Delimer	1
00562.00	Roller Door Switch	1
00602.20	Door Spring	1
00631.05	Ice Cube Relay 220V 12 Amp	1
00706.00	3/4 Water Solenoid Repair Kit JE	1
00707.00	1/2 Water Solenoid Repair Kit JE	1
00735.00	3/4 Vac Breaker Rep Kit Watts	1
00738.15	Solenoid Coil JE 220V (3/4 & 1/2)	1
03202.00	Wash Thermometer. (Rinse PN3202.18)	1
03408.55	Counter - Face Mount 220V/50Hz	1
03470.00	Toggle Switch (Momentary) Screw Term	1
03623.00	½" Vac Breaker Repair Kit Watts	1
13003.17	Contactor 60 Amp 3 Pole	1
13003.55	Contactor 30 Amp	1
13304.55	SS Final Rinse Spray Jet SS	1
13417.92	Heater Thermostat	1
13422.71	Immersion Heater 240V/12kW T-Flange	1
13463.14	Liquid Level Switch-Long-D Flat	1
13605.00	Pressure Gauge(PN13605.45 MFG after Jan 2020)	1
15518.00	Immersion Heater 6kW208-240V T-Flange	1
17523.51	Hi Limit Switch 250 Deg	1

1.2. Exploded View Drawings

1.2.1. Straight Frame System Assembly

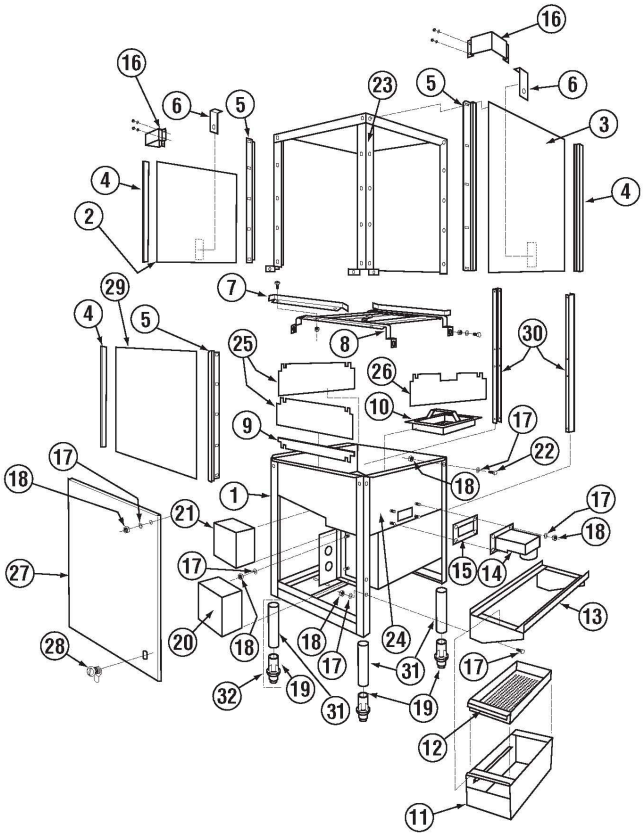

ITEM NO.	NO. REQ'D	P/N	DESCRIPTION
1	1	17532.18	Frame Stand
2	1	17506.37	Left Door
3	1	17506.38	Ventless Right Door
4	6	00636.17	E Z Door Glide
5	6	17554.00	Door Guide
6	2	17552.00	Door Stop
7	1	01505.16	Corner Tray Track Rail
8	1	01505.10	Tray Track (EST/EC/ 180)
9	1	17506.65	Door Service Splash Guard
10	2	17510.00	Strainer Basket
11	1	01579.10	Scrap Body SS
12	1	01579.20	Scrap Trap Drawer
13	1	17579.00	Scrap Trap Holder
14	1	17511.00	Overflow
15	1	17402.00	Overflow Gasket
16	1	01516.50	3-Dr Bracket outside Style

ITEM NO.	NO. REQ'D	P/N	DESCRIPTION
17	60	00924.00	¼" SS Washer
18	30	00912.00	¼"-20 Nylon Lock Nut
19	4	01310.00	Bullet Feet
20	1	17522.50	Wash Tank Heater Cover
21	1	17522.00	Booster Heater Cover
22	23	00914.10	1/4-20 X 5/8 Hex Bolt
23	1	17591.00	CMA-180 Ventless Wrapper
24	1	17531.00	Pan
25	2	17506.60	Door Panel Splash Guard
26	1	17506.62	180 Splash Shield - lever side
27	1	17546.00	CMA-180VL Skirt
28	1	00449.50	Keyless Lock
29	1	17506.36	Front Door
30	2	17530.45	Frame Support Bar
31	4	01572.10	SS Leg (A, AH, C, B)
32	--	01145.00	Leg Assembly, 10" w/Bullet Foot

Buy Parts

1.2.2. Heat Recovery System

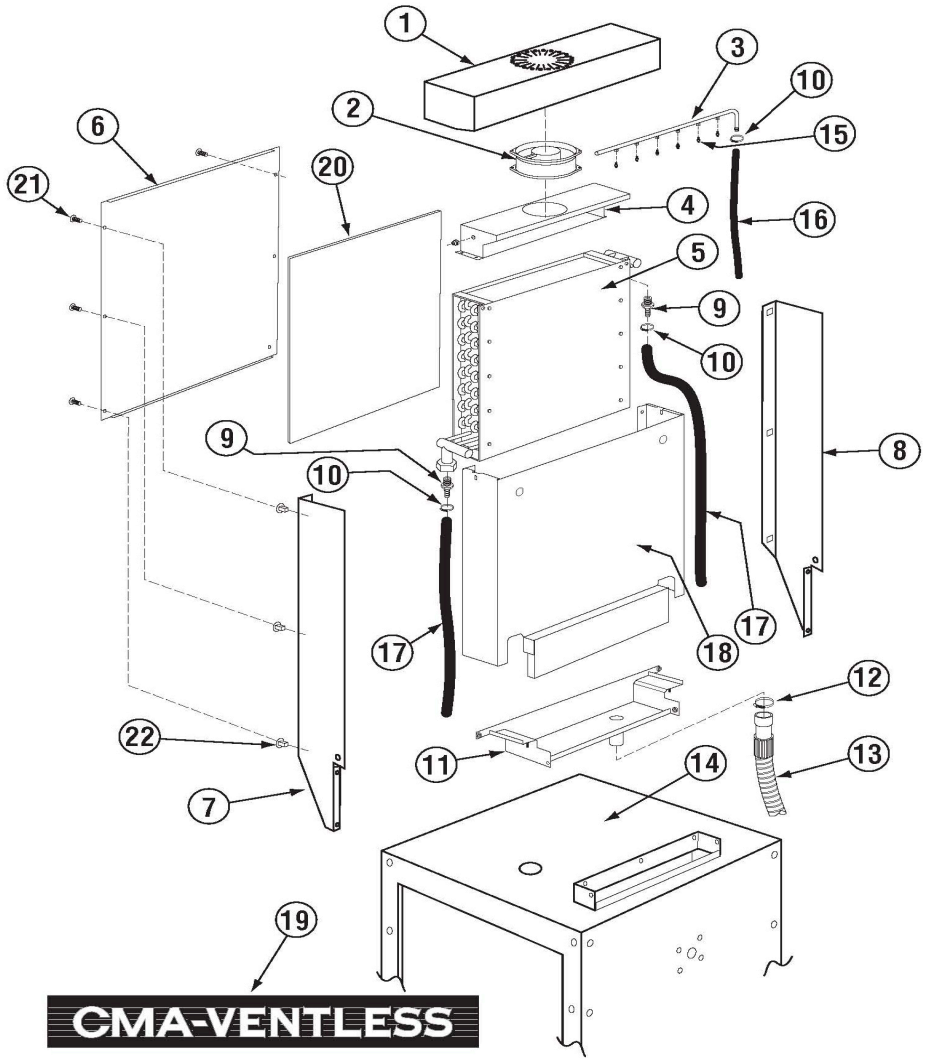

ITEM NO.	NO. REQ'D	P/N	DESCRIPTION
1	1	17595.00	CMA-180 Ventless Top Cover
2	1	02401.01	Motor Fan 230V, 50/60Hz
3	1	02401.17	Battery Self Cleaning Pipe Incl 6-#15
4	1	17593.00	CMA-180 Ventless Fan Mount
5	1	02401.05	Heat Recovery Battery
6	1	17596.00	CMA-180 Ventless Rear Cover
7	1	17598.00	CMA-180 Ventless Support L.H.
8	1	17597.00	CMA-180 Ventless Support R.H.
9	2	40014.00	1/2m x 1/2 Barb Straight
10	3	03101.45	Hose Clamp #4
11	1	17592.00	CMA-180 Ventless Drain Pan

ITEM NO.	NO. REQ'D	P/N	DESCRIPTION
12	1	03101.00	Hose Clamp #16 1"
13	1	15605.00	Drain Hose with Goose Neck (9-06)
14	1	17591.00	CMA-180 Ventless Wrapper
15	7	02101.01	Stainless Steel Rinse Nozzle
16	FT	03107.51	Flexible Black Hose 3/8" Order per foot
17	FT	03107.50	Flexible Black Hose ½" Order per foot
18	1	17594.00	CMA-180 Ventless Shroud
19	1	06231.15	CMA Ventless Label 23.25 x 3.25
20	1	17599.15	Heat Recovery Battery Insulation
21	6	00982.00	Phillips Truss Screws
22	6	00981.00	Nylon Pop-in Nut

Buy Parts

1.2.3. Drain System Assembly (Ventless Unit)

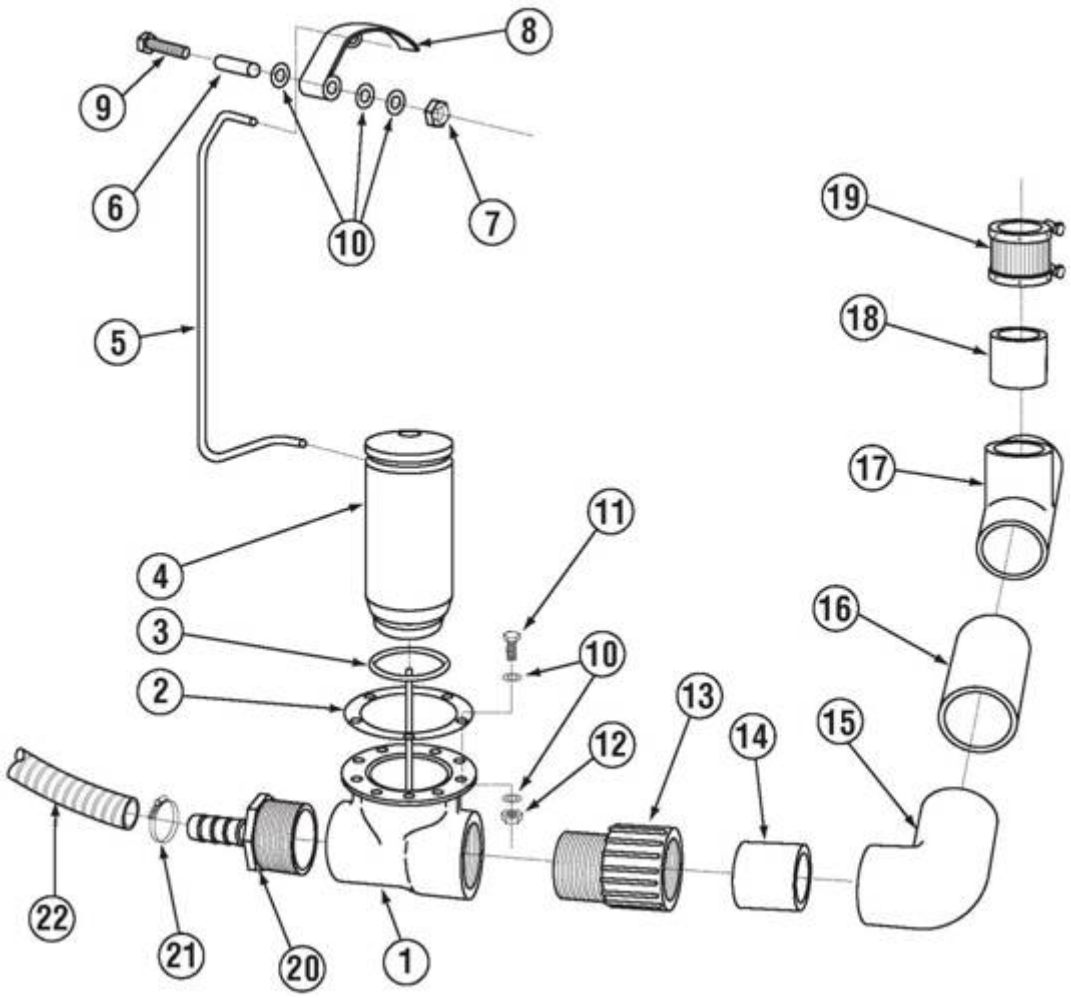

ITEM NO.	NO. REQ'D	P/N	DESCRIPTION
1	1	00113.17	Drain Tee Casting
2	1	00114.00	Drain Tee Gasket
3	1	00121.18	Drain Stopper "O" Ring
*4	1	00121.17	Drain Stopper
5	1	17581.00	Drain Linkage
6	1	17580.50	Drain Linkage Spacer
7	1	00912.00	¼-20 Nylon Lock Nut
8	1	17580.00	Drain Lever
9	1	00910.00	¼"-20 x 1 ½" Hex Head Bolt
10	16	00926.00	5/16 S/S Washer
11	6	00901.00	5/16 –18 x 1" Hex Head Bolt
* #00121.17 includes #00121.18			

ITEM NO.	NO. REQ'D	P/N	DESCRIPTION
12	6	13805.00	5/16-18 Nylon Lock Nut
13	1	01313.00	2" PVC Slip x MIPT Adapter
14	1	05030.17	2" x 4" PVC Tubing
15	1	01312.00	PVC Slip x Slip 90 Elbow
16	1	05030.27	2" x 6" PVC Tubing
17	1	01320.17	2" PVC Tee SxSxS
18	1	05030.10	2" x 3" PVC Tubing
19	1	01315.17	2" No Hub
20	1	50302.42	180VL Drain Hose Fitting
21	1	03101.00	Hose Clamp #16 1"
22	1	15605.00	Drain Hose with Goose Neck

1.2.4. Plumbing System Assembly (January 2020)

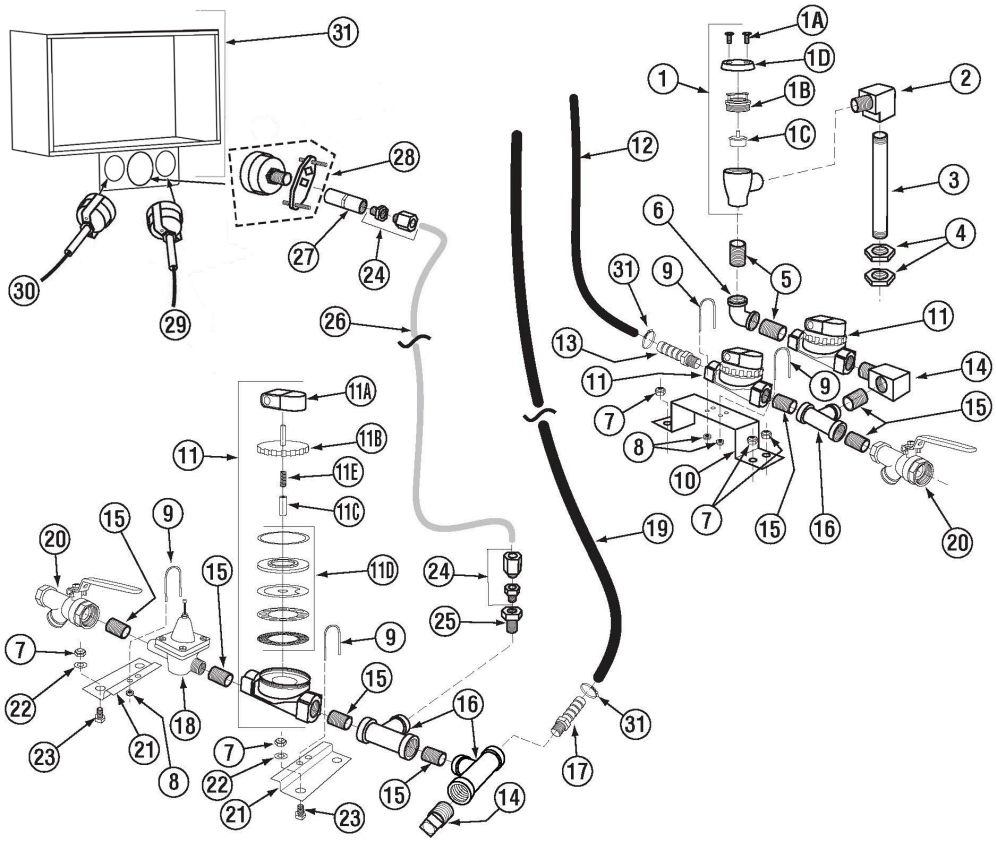

ITEM NO.	NO. REQ'D	P/N	DESCRIPTION
1	1	00710.50	Vacuum Breaker ¾" Watts
1A	--	00421.51	Pan Head Screw SS 6-32 x 1/4"
1B	--	00735.60	Vacuum Breaker Brass Bonnet ¾"
1C	--	00735.00	Vacuum Breaker Repair Kit ¾"
1D	--	00739.50	Vacuum Breaker Cap
2	1	00704.00	Street Elbow 3/4" 90Deg
3	1	13613.00	Nipple ¾" x 5 ½" Brass
4	2	13606.10	Jamb Lock Nut Thin Pattern
5	2	13639.00	Nipple SS 3/4 x Close
6	2	13633.00	3/4 90 Elbow FxF Brass
7	6	00912.00	1/4-20 Nylon Lock Nut
8	4	00912.00	1/4-20 Nylon Lock Nut
9	3	01526.10	Plumbing Bracket Strap
10	1	01526.00	Plumbing Support Bracket
11	3	03603.15	1/2 Solenoid Valve JE 240V/60Hz
11A	1	00738.15	Water Sol Valve Coil 220V
11B	--	03603.20	Water Sol Valve Bonnet ½"
11C	--	00786.00	Water Sol Plunger ½" & ¾" w/spring
11D	--	00707.00	Water Sol Repair Kit JE ½"

ITEM NO.	NO. REQ'D	P/N	DESCRIPTION
12	Per FT	03107.51	Flexible Black Hose 3/8"
13	1	40014.10	1/2m x 3/8" Barb Straight
14	1	13642.00	1/2" MIP Plug Brass Sq. Head
15	8	03614.00	Nipple Brass 1/2" Close
16	3	00743.10	Tee ½" FxFxF
17	1	40014.00	1/2m x 1/2" Barb Straight
18	1	13602.20	Pressure Regulator 1/2
19	Per FT	03107.50	Flexible Black Hose ½"
20	2	41062.00	1/2" Strainer Ball Valve
21	2	01528.00	Plumbing Support Bracket
22	2	00924.00	1/4 SS Washer
23	2	00906.00	1/4-20 X 1/2 Hexhead Bolt
24	2	40116.00	1/4 Comp x 1/4 MIP Fitting
25	1	13604.00	1/2 x 1/4 Bushing Brass
26	1	00425.24	Chemical Tubing
27	1	13618.11	Coupling ¼" Brass
28	1	13605.45	Pressure Gauge
29	1	03202.00	Wash Thermometer
30	1	03202.18	Final Rinse Thermometer

1.2.4. Plumbing System Assembly

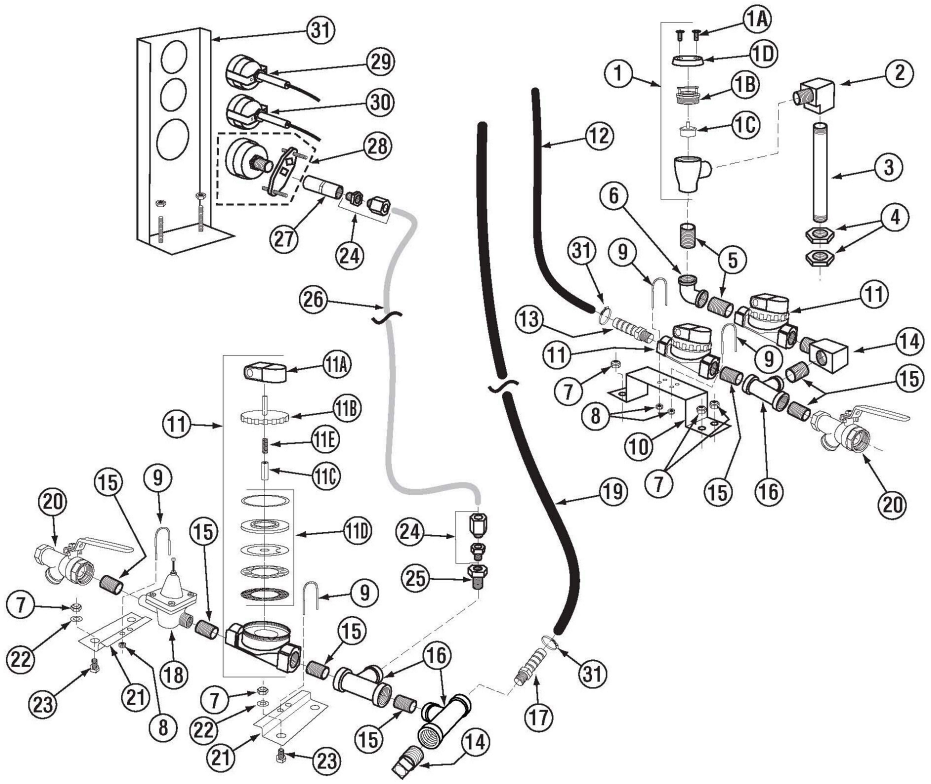

ITEM NO.	NO. REQ'D	P/N	DESCRIPTION
1	1	00710.50	Vacuum Breaker ¾" Watts
1A	--	00421.51	Pan Head Screw SS 6-32 x 1/4"
1B	--	00735.60	Vacuum Breaker Brass Bonnet ¾"
1C	--	00735.00	Vacuum Breaker Repair Kit ¾"
1D	--	00739.50	Vacuum Breaker Cap
2	1	00704.00	Street Elbow 3/4" 90Deg
3	1	13613.00	Nipple ¾" x 5 ½" Brass
4	2	13606.10	Jamb Lock Nut Thin Pattern
5	2	13639.00	Nipple SS 3/4 x Close
6	2	13633.00	^3/4 90 Ell F x F Brass
7	6	00912.00	1/4-20 Nylon Lock Nut
8	4	00912.00	1/4-20 Nylon Lock Nut
9	3	01526.10	Plumbing Bracket Strap
10	1	01526.00	Plumbing Support Bracket
11	3	03603.15	1/2 Solenoid Valve JE 240V/60Hz
11A	1	00738.15	Water Sol Valve Coil 220V
11B	--	03603.20	Water Sol Valve Bonnet ½"
11C	--	00786.00	Water Sol Plunger ½" & ¾" w/spring
11D	--	00707.00	Water Sol Repair Kit JE ½"
12	FT	03107.51	Flexible Black Hose 3/8"

ITEM NO.	NO. REQ'D	P/N	DESCRIPTION
13	1	40014.10	1/2m x 3/8" Barb Straight
14	1	13642.00	/2" MIP Plug Brass Sq. Head
15	8	03614.00	Nipple Brass 1/2 Close
16	3	00743.10	Tee ½" FXFXF
17	1	40014.00	1/2m x 1/2 Barb Straigh
18	1	13602.20	Pressure Regulator 1/2
19	FT	03107.00	Flexible Black Hose ½"
20	2	41062.00	^1/2 Strainer Ball Valve
21	2	01528.00	Plumbing Support Bracket
22	2	00924.00	1/4 SS Washer
23	2	00906.00	1/4-20 X 1/2 Hexhead Bolt
24	2	40116.00	1/4 Comp x 1/4 MIP Fitting
25	1	13604.00	1/2 x 1/4 Bushing Brass
26	1	00425.54	Chemical Tubing
27	1	13618.11	Coupling ¼" Brass
28	1	13605.45	Pressure Gauge 180-UC
29	1	03202.00	Thermometer "Wash"
30	1	03202.18	Thermometer "Rinse"
31	1	17534.50	Gauge Bracket

1.2.5. Wash Spray System

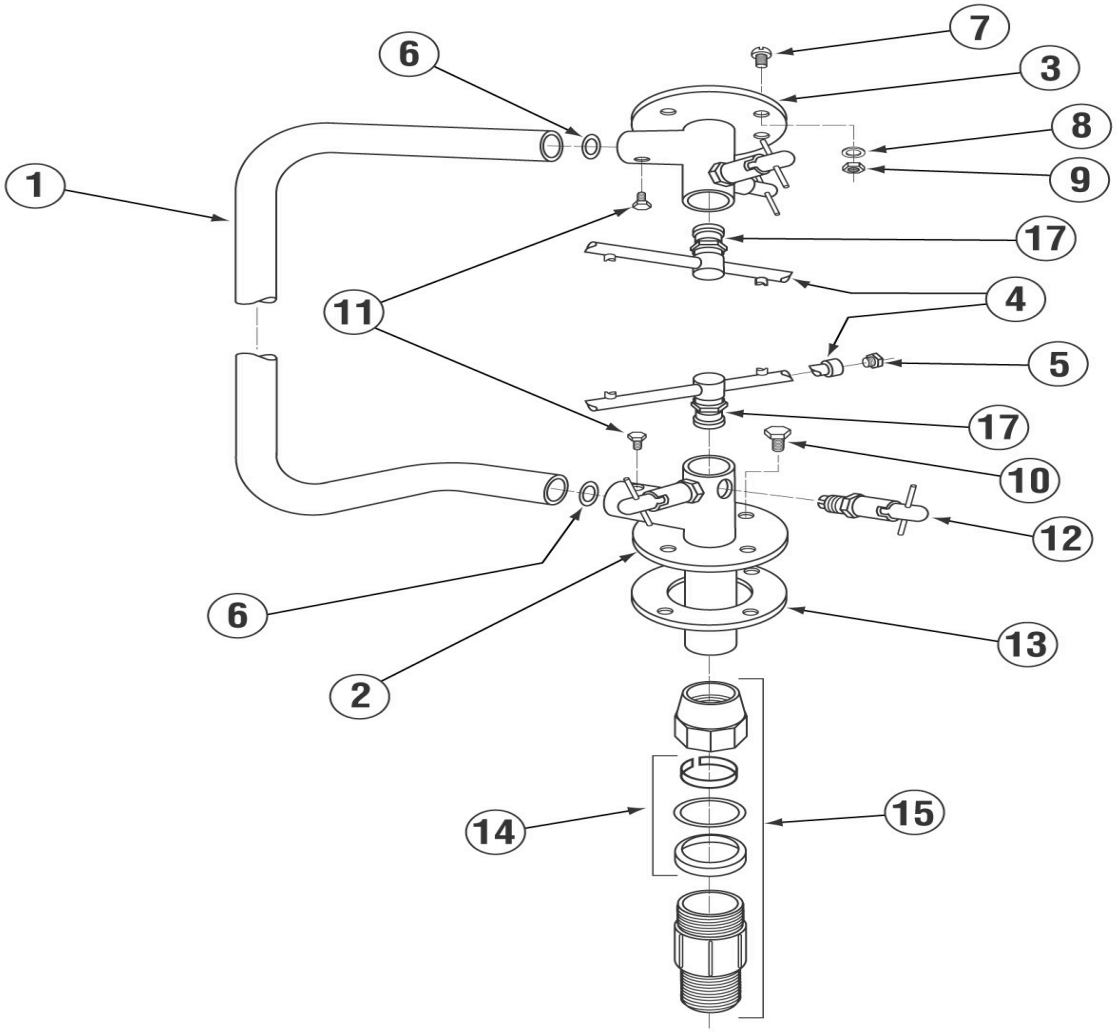

ITEM NO.	NO. REQ'D	P/N	DESCRIPTION
1	1	00303.17	Manifold
*2	1	00360.24	Lower Spray Base Assembly
**3	1	00361.10	Upper Spray Base Assembly
4	2	00304.17	Wash Spray Arm
5	4	00308.50	Spray Arm End Plug SS
6	2	00302.51	Spray Base "O" Ring
7	4	00905.00	Truss Head Bolt ¼"-20"x1/2"
8	12	00924.00	SS Washer ¼"

ITEM NO.	NO. REQ'D	P/N	DESCRIPTION
9	8	00912.00	Nylon Lock Nut ¼" – 20
10	4	00914.10	Hex Head Bolt ¼"-20"x5/8"
11	2	00966.10	Hex Head SS Bolt 10-32
12	4	00363.00	Spray Base Lock Pin
13	1	00302.00	Spray Base Gasket
14	1	00225.00	Compression Gasket
15	1	00221.20	1" Comp. Fit.x1"MIP SS
16	1	00759.17	Base Quick Release W/Nipple
17	2	00341.00	Spray Arm Bearing

**P/N 00361.10 Includes Items 11,12 & 6

*P/N 00360.24 Includes Items 11, 12 & 6

1.2.6. Final Rinse System Assembly

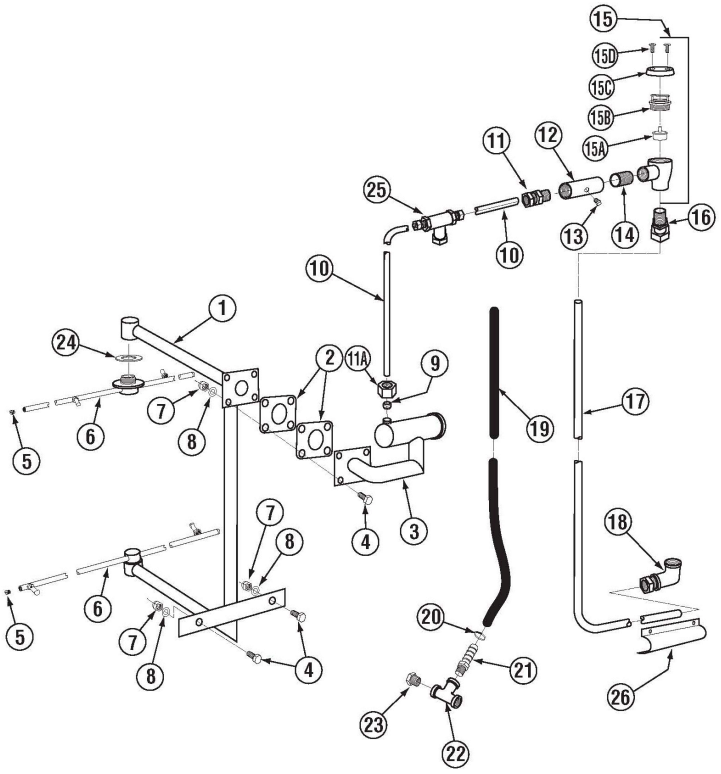

ITEM NO.	NO. REQ'D	P/N	DESCRIPTION
1	1	17401.00	Final Rinse Manifold
2	2	04306.00	Square Manifold Gasket (CMA-180)
3	1	13607.40	180VL Final Rinse Pipe Ass.
4	6	00914.00	¼"-20x5/8 Hex Bolt
5	4	00308.17	Rinse Arm SS End Plug
6	2	00304.29	Rinse Arm w/ Bearings (180&180UC)
7	6	00912.00	¼"-20 Nylon Lock Nut
8	6	00924.00	¼"SS Washer
9	1	13607.20	3/8 Compression Fitting Sleeve
10	1	05004.10	3/8" SS Tubing
11	1	00436.20	3/8" Comp X 1/2" MIP Fitting
11A	1	13607.10	3/8 Compression Fitting Nut
12	1	13669.45	Mixing Chamber SS CMA 180UC
13	1	03232.00	1/8 Male Plug
14	1	13629.00	½" S.S. Close Nipple

ITEM NO.	NO. REQ'D	P/N	DESCRIPTION
15	1	03624.00	½" Vacuum Breaker
15A	--	03623.00	½" Vacuum Breaker Kit
15B	--	03624.25	½" Brass Bonnet
15C	--	00739.50	¾" Vacuum Breaker Cap
15D	--	00421.51	6-32 x ¼" SS Pan Head Screw Phillips
16	1	00760 .00	5/8 Comp x 1/2 MIP Adapter
17	1	13607.44	180VL Rinse Plumbing Line
18	1	00745.00	1/2 90Deg Street Elbow
19	FT	03107.00	Flexible Black Hose ½" Order per foot
20	1	03101.45	Hose Clamp #4
21	1	40014.00	1/2m x 1/2 Barb Straight
22	1	00743.00	1/2 Tee F x F x F Brass (Plated)
23	1	13642.00	1/2" Male Plug Brass
24	1	4305.17	Red Silicone Gasket (CMA-180)
25	1	13607.55	CMA-180VL F.R. Thermometer Fitting
26	1	15606.00	Conduit Heat Shield

1.2.7. CMA-180 Door Handle Assembly

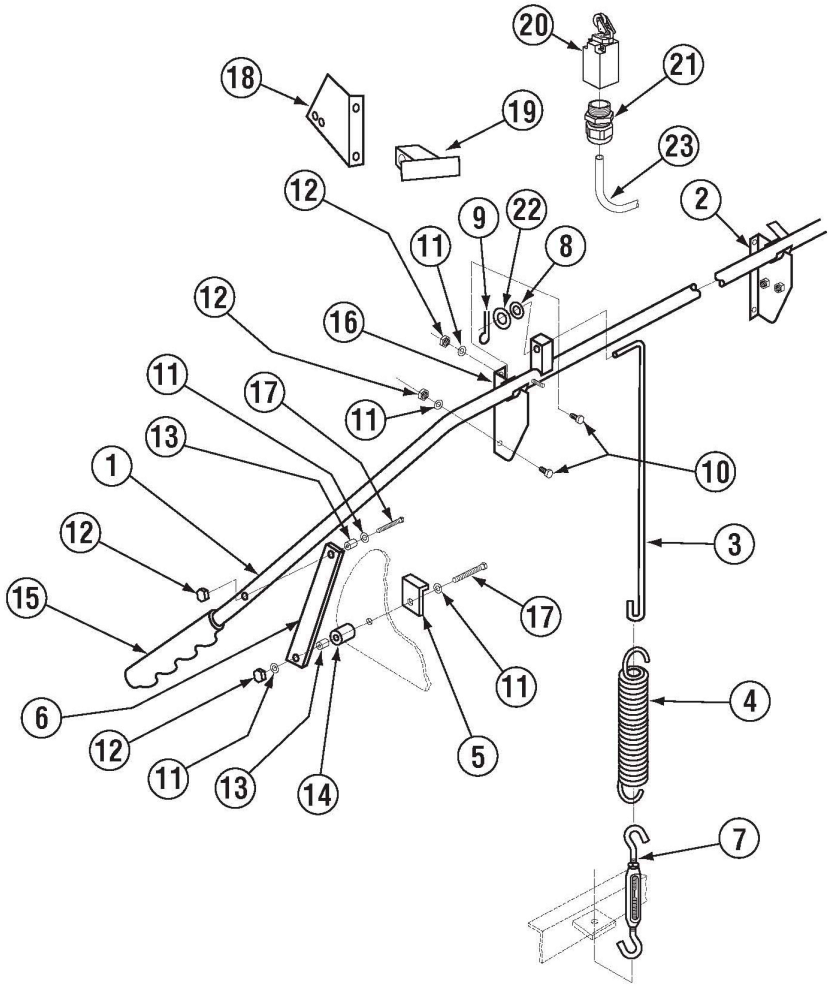

ITEM NO.	NO. REQ'D	P/N	DESCRIPTION
1	1	00613.32	Door Handle
2	1	01556.50	Right Door Handle Support
3	2	00603.07	Door Spring Extension Rod
4	2	00602.00	Door Spring
5	2	17552.00	Door Stop
6	2	01553.00	Door Handle Link
7	2	00606.50	Turn Buckle
8	2	00926.00	5/16" SS Washer
9	2	00900.00	Cotter Pin
10	4	00906.00	¼"-20 x ½" Hex Head screw
11	8	00924.00	¼" SS Washer
12	8	00912.00	¼"-20" Nylon Insert Lock Nut

ITEM NO.	NO. REQ'D	P/N	DESCRIPTION
13	4	00610.00	Door Handle Spacer (Small)
14	4	00611.00	Door Handle Spacer (Large)
15	2	00607.04	Door Handle Cap
16	1	01555.50	Left Door Handle Support
17	2	00910.00	¼"-20x1/2" Hex Head Bolt
18	1	00563.40	Door Switch Bracket (8-08)
19	1	00563.42	Door Switch Actuator (8-08)
20	1	00562.00	Door Roller Switch
21	1	00562.60	Connector Door Roller Switch
22	1	00605.30	Door Rod Spacer
23	1	00546.00	18 AWG Switch Cord

1.2.8. Pump System Assembly

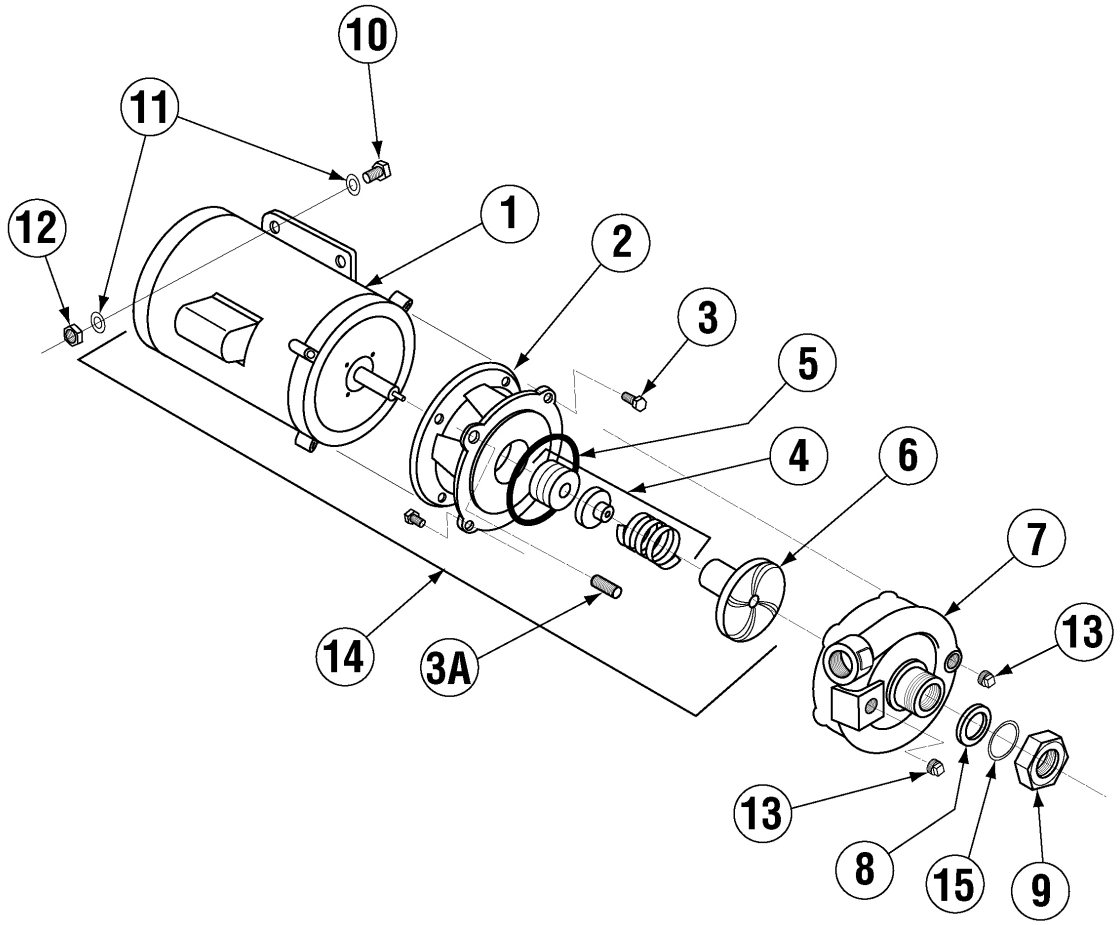

ITEM NO.	NO. REQ'D	P/N	DESCRIPTION
1	1	00201.00 00201.85	Pump Motor 1 HP115/230V Pump Motor 1 HP230/460V
2	1	04207.10	Small Pump Base
3	6	00921.00	3/8"-16 x 34" Hex Head Bolt
3A	2	00975.00	3/8-16 x 1 ½" Stud
4	1	00206.30	Pump Seal Kit
5	1	03226.00	Pump "O" Ring
6	1	03222.10	Impeller SS
7	1	04207.20	Pump Cover

ITEM NO.	NO. REQ'D	P/N	DESCRIPTION
8	1	00208.40	Slip Joint Nut Gasket
9	1	04204.00	Compression Nut (2.5)
10	2	00906.00	¼-20 x 1/2" Hex Bolt
11	2	00924.00	¼" SS Washer
12	2	00912.00	¼"-20 Nylon Lock Nut
13	2	00238.00	3/8" Male Plug
*14	Assy.	00200.10	Pump Assy
15	1	00208.21	Slip Joint Nut Friction Ring
*P/N 00200.85 Includes Items 1,2,3,4,5 and 6			

1.2.9. Wash Tank Heater (Triangular Flange)

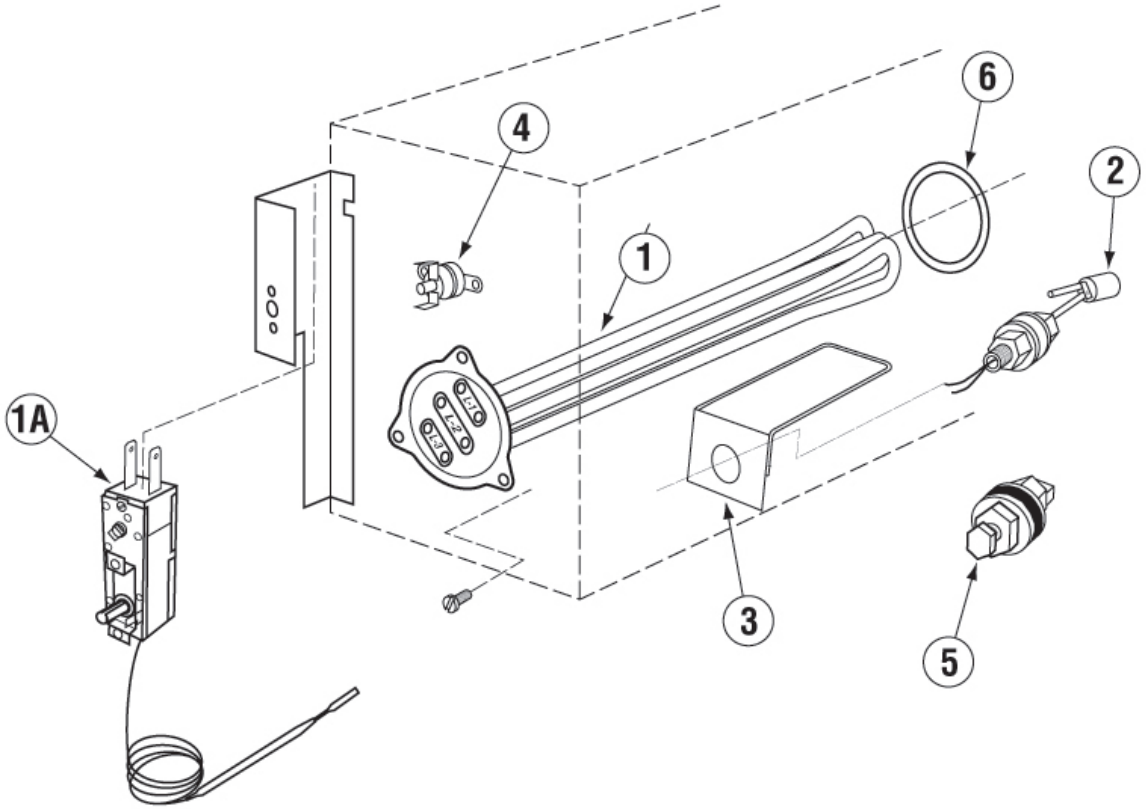

ITEM NO.	NO. REQ'D	P/N	DESCRIPTION
1	1	15518.00 13422.76	Heater 6kW 220V Triangular Flange Heater 6kW 480V Triangular Flange
1A	1	13417.92	Heater Thermostat
2	1	13463.14	Liquid Level Switch
3	1	13463.51	Liquid Level Switch Shield
4	1	17523.51	Hi-Limit Switch - Wash 250 Degrees
5	1	13477.20	7/8" Probe Hole Plug
6	1	15518.11	Gasket for Triangular Flange Heater

1.2.10. Booster Tank Heater (Triangular Flange)

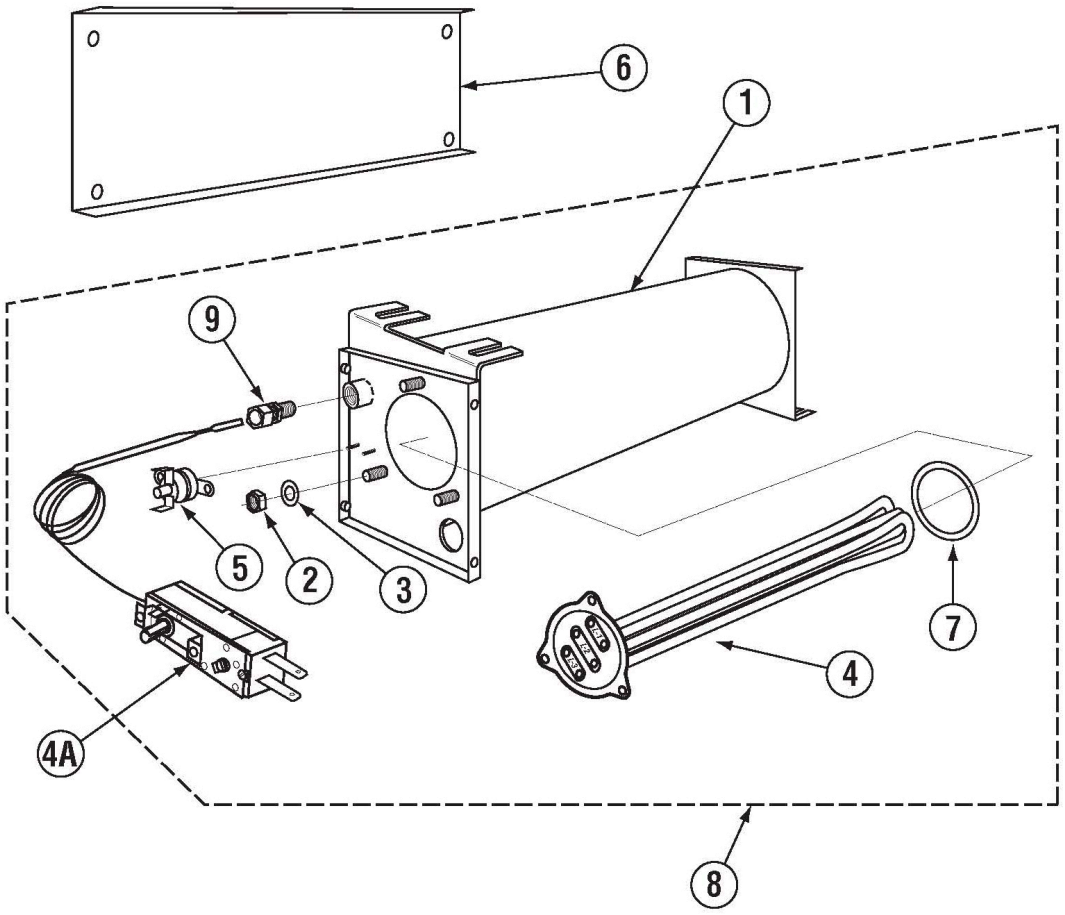

ITEM NO.	NO. REQ'D	P/N	DESCRIPTION
1	1	17550.20	Booster Tank
2	3	13805.00	Nylon Lock Nut 5/6"-18
3	3	00926.00	Washer SS 5/16"
4	1	13422.71 13422.75	240V 12KW Triangular Immersion Htr 480V 12 kW Triangular Immersion Htr
4A	1	13417.92	Thermostat 12KW Heater
5	1	17523.51	Hi-Limit Switch-Booster 250 degrees
*6	1	17520.00	Booster Heater Shield*
7	1	15518.11	Gasket for Triangular Flange Heater
8	1	17560.00	Complete Assembly
9	1	40116.00	1/4 Comp x 1/4 MIP Fitting

1.2.11. Control Box Assembly

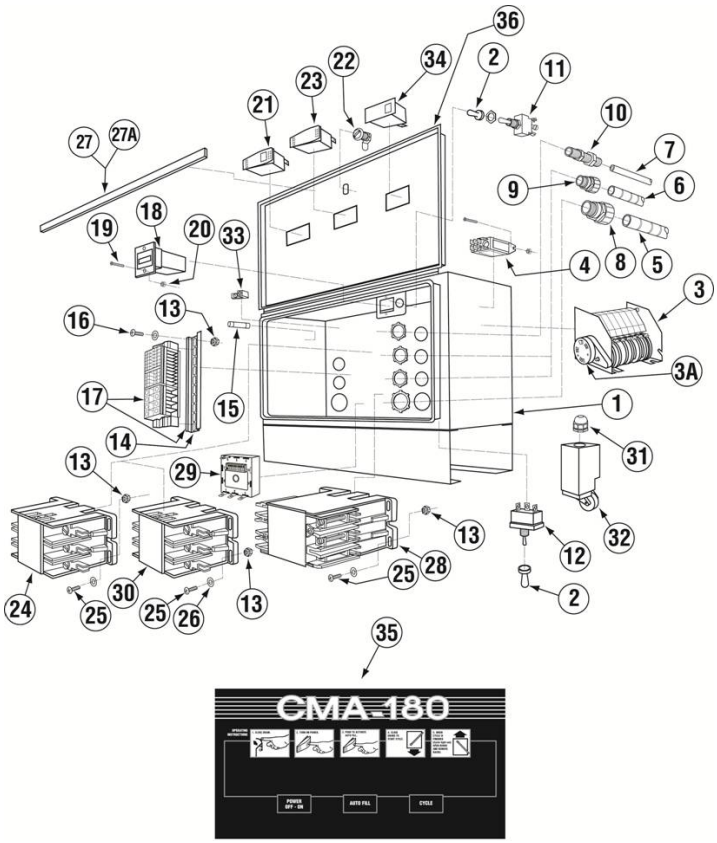

ITEM NO.	NO. REQ'D	P/N	DESCRIPTION
1	1	17503.39	CMA-180 Control Box Body
2	2	00470.10	Toggle Switch Rubber Boot
3	1*	00409.93	Timer CMA-180
3A	1	00500.20	Timer Motor
4	1(2*)	00631.05	Ice Cube Relay 220V
5	6 Ft.	00400.85	Conduit ¾" Sealtite
6	6 Ft.	00400.10	Conduit ½" Sealtite
7	2 Ft.	00400.00	Conduit 3/8" Sealtite
8	1	00401.85	St-3/4" Straight Connector
9	1	00401.10	St-1/2" Straight Connector
10	1	00401.00	St-3/8" Straight Connector
11	1	00475.70	Delimer Switch DPDT 15A
12	1	03470.00	Toggle Switch Momentary (Screw Terminal)
13	8	03801.00	Nylon Lock Nut 10-32
14	1	17400.06	Mountain Din Rail
15	1	13403.26	Fuse 3A/250V Slow Blow
16	2	00941.00	Pan Head Screw 10 -32 x 5/8"
17	1	17400.17	Terminal Block Assembly
17A	2	17400.04	30 Amp Terminal Block-Red
17B	3	17400.03	60 Amp Terminal Block-Black
17C	4	17400.02	85 Amp Terminal Block-Natural
17D	2	17400.08	30 Amp Terminal Block-Blue
17E	2	17400.09	30 Amp Terminal Block-Natural

* Includes timer motor p/n 501.17 and microswitch 411.00

ITEM NO.	NO. REQ'D	P/N	DESCRIPTION
17F	1	17400.07	60 Amp Terminal Block-Green
18	1	03408.55	Counter Face Mount 220V
19	4	00911.00	Pan Head Screw 8-32 x 1/2"
20	4	00927.00	Lock Nut 8-32
21	1	00421.90	Power Switch
22	1	00449.50	Keyless Lock
23	1	00421.89	Rocker Switch Auto Fill
24	1	00404.85	Motor Contactor 208/240V 20A
		13003.55	Motor Contactor 30 Amp
25	6	13825.00	Pan Head Screw 8-31 x 1"
26	6	04806.00	#10 Brass Washer
27	2	17503.17	Control Box Sponge Long
27A	2	17503.18	Control Box Sponge Short
28	1**	13003.17	Contactor 60A 3 Pole 220V
29	1	13418.60	Dip Switch Timer 230V
30	1	13003.55	Heater Contactor 30 Amp
31	1	00562.60	Door Roller Switch Connector
32	1	00562.00	Door Roller Switch
33	1	13426.50	Ground Block
34	1	00421.78	Illuminated Plug
35	1	006231.19	Control Panel Label CMA-180
36	1	17503.29	Control Box Lid

** Only for the machines with booster heater

1.2.12. Heat Recovery System Control Box

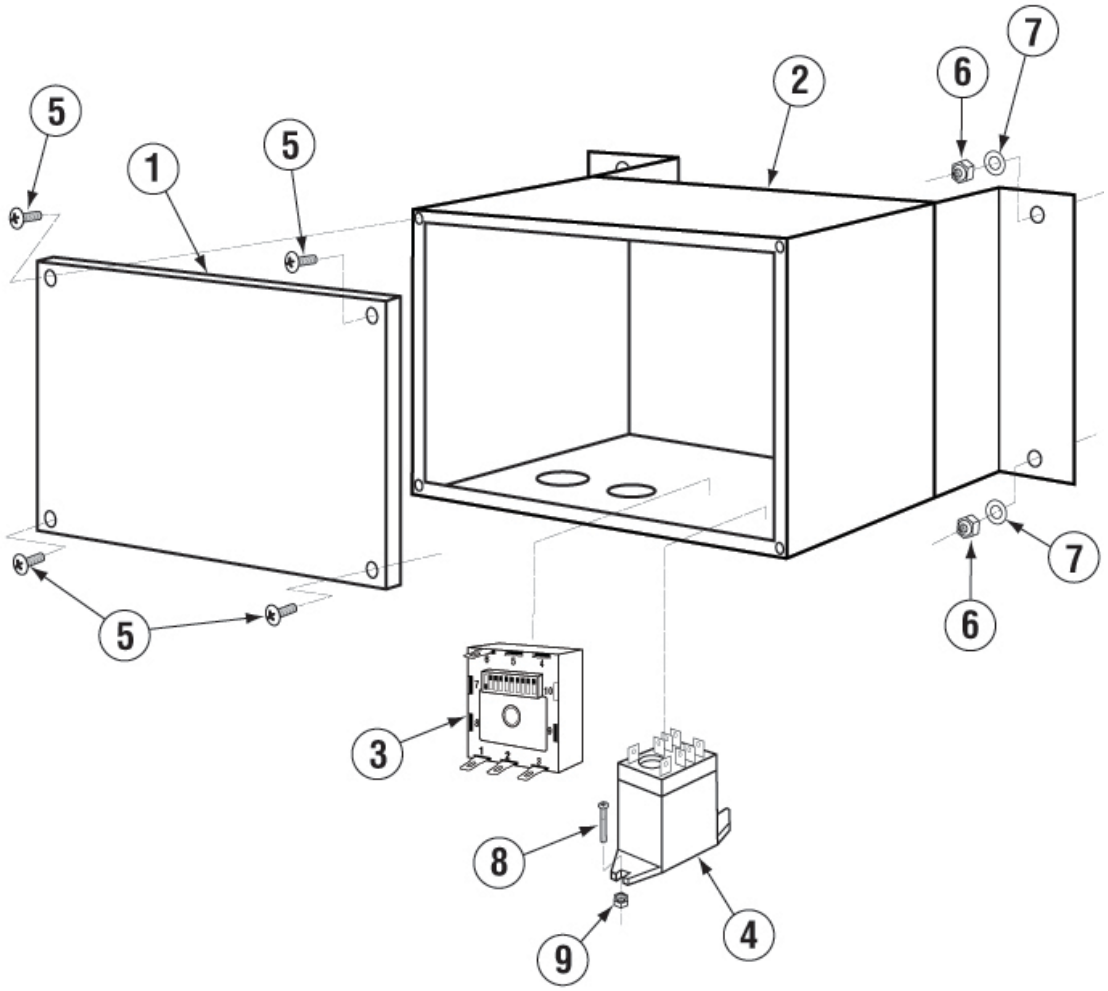

ITEM NO.	NO. REQ'D	P/N	DESCRIPTION
1	1	13905.23	Transformer Box Lid
2	1	13905.13	Transformer Box
3	1	13418.60	Dip Switch Timer 230 V
4	1	00631.05	Ice Cube Relay 220V 12 Amp
5	4	00940.50	10-32 X 3/8 Truss Head Screw
6	4	0013805	5/16-18 Nylon Insert Lock Nut
7	4	00926.00	5/16 SS Washer
8	2	00907.00	6-32 X 1/2 SS Panhead Screw
9	2	00965.00	6-32 Nylon Insert Lock Nut

1.2.13. Heat Recovery System Control Box 480V

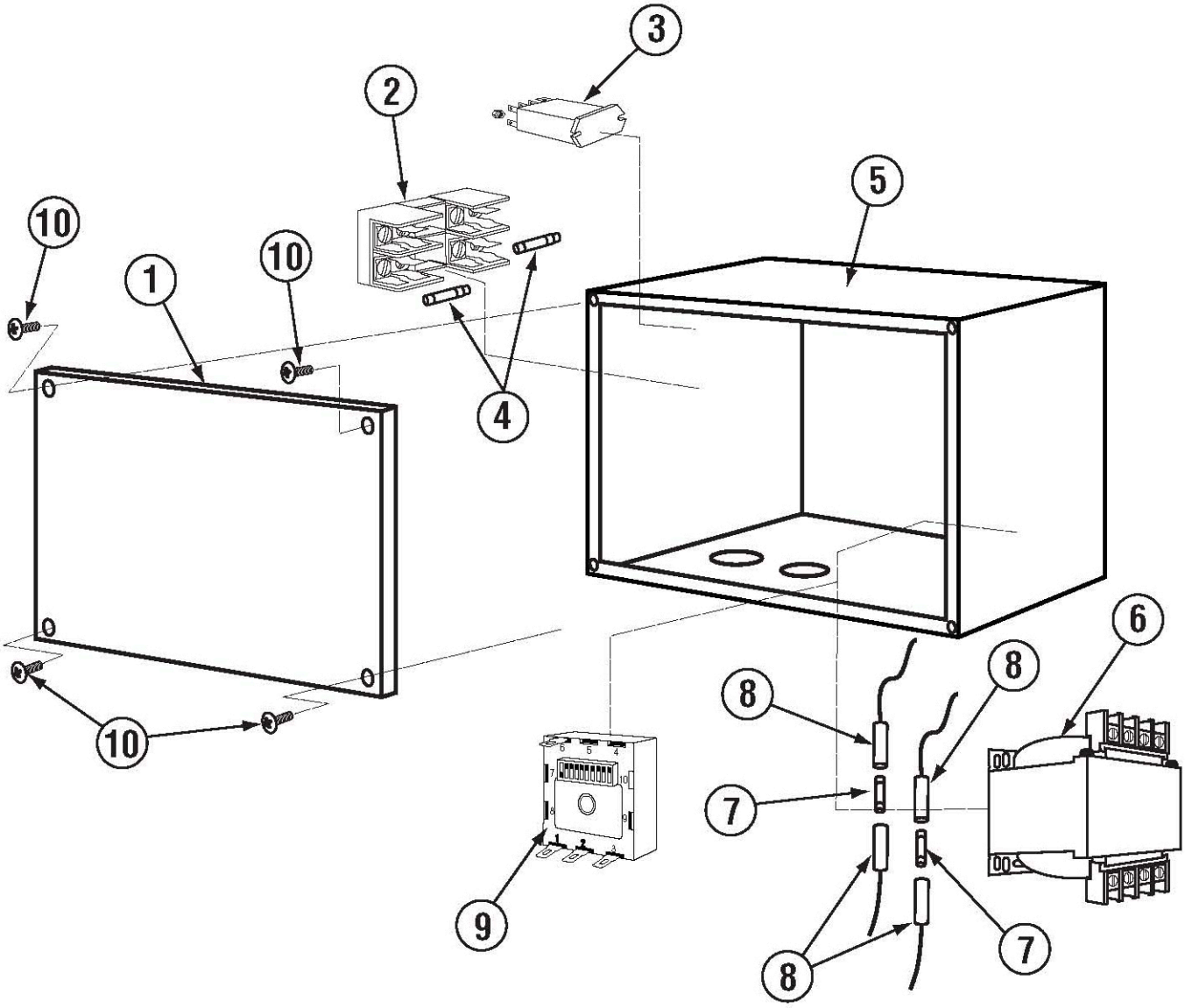

ITEM NO.	NO. REQ'D	P/N	DESCRIPTION
1	1	13905.24	Transformer Box Lid 180VL, 480V
2	1	13420.10	Fuse Clip 2-Poll, Pressure Plate
3	1	00631.05	Ice Cube Relay 220V
4	2	13402.10	Fuse 1.50 Amp, 480V Slow Blow
5	1	13905.14	Transformer Box 180VL, 480V
6	1	13423.82	Transformer 480V-240V
7	2	13403.40	Fuse 1.25 Amp, 230V Slow Blow
8	4	13403.21	Fuse Holder - Inline
9	1	13418.60	Dip Switch Timer 230 V
10	4	00940.50	10-32 3/8 Truss Head Screw

1.2.14. Door Safety Interlock (DSI) Assembly P/N 17712.84

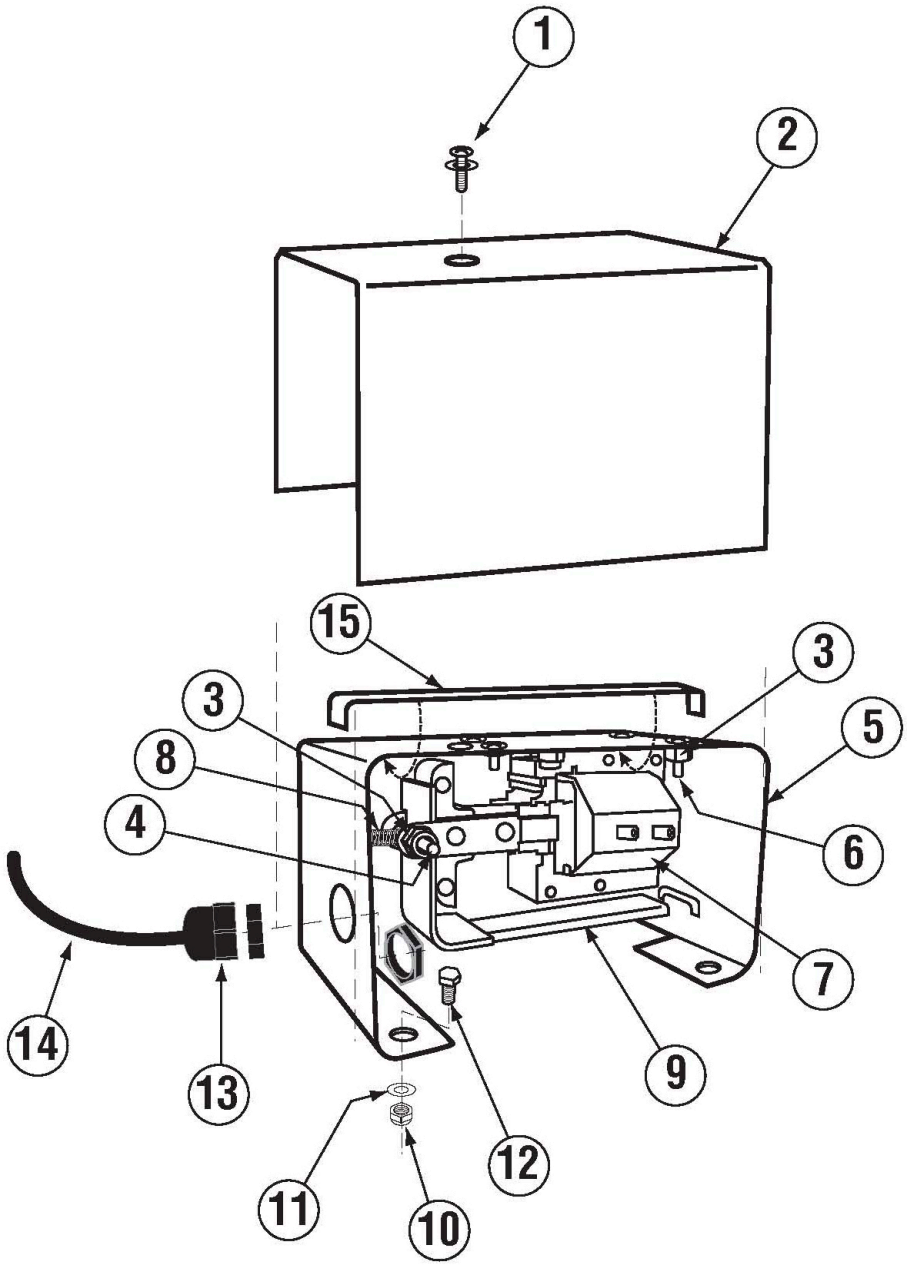

ITEM NO.	NO. REQ'D	P/N	DESCRIPTION
1	1	03801.40	10-32 x 1/2 Cone Screw
2	1	17712.30	DSI Cover
3	5	00927.00	8-32 Nylon Lock Nut
4	1	00902.00	8-32 X 1 1/4 Panhead Bolt
5	1	17712.35	DSI Mount
6	4	00970.60	8-32 x 1/2 Flat Screw
7	1	00100.05	Drain Ball Solenoid 240V

ITEM NO.	NO. REQ'D	P/N	DESCRIPTION
8	1	17712.50	Solenoid Spring
9	1	17711.11	CMA-180VL Interlock Bar
10	4	00912.00	1/4-20 Nylon Lock Nut
11	4	00924.00	1/4-20 Nut w/ Grip Washer
12	4	00906.00	1/4-20 X 1/2 Hexhead Bolt
13	1	00562.60	Roller Door Switch
14	1	00547.00	Switch Cord 18 AWG
15	1	01550.00	Solenoid Stop

1.2.15. Unique Parts For CMA-180VL-T

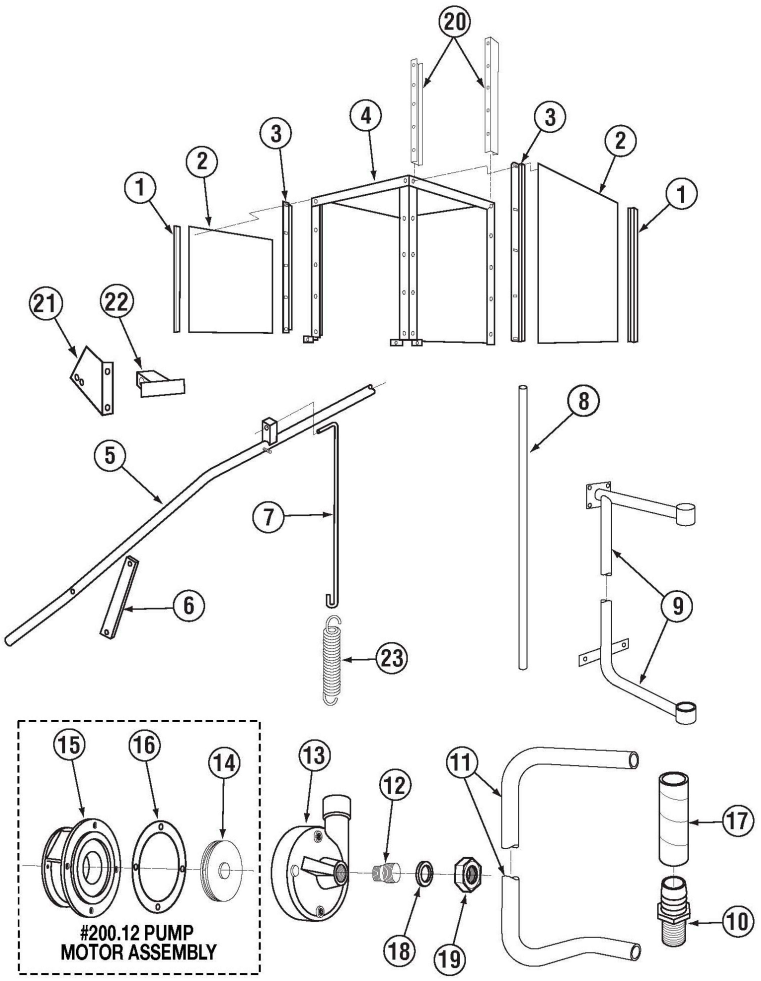

ITEM NO.	NO. REQ'D	P/N	DESCRIPTION
1	6	00636.27	Door Guide 36 1/4"
2	3	17506.20	Scullery Door
3	6	17554.20	Scullery Door Guide
4	1	17530.20	Scullery Wrapper
5	1	00613.27	Door Handle S
6	2	01553.22	Door Handle Link S
7	2	00603.53	Door Spring Extension Rod
8	2	05007.27	Booster Water Line
9	1	17401.20	Final Rinse Manifold
10	1	50302.10	1" MPT x 1" Barb Brass
11	1	00303.27	Manifold
12	1	00212.50	1-1/2"x1-1/4"Adapter

ITEM NO.	NO. REQ'D	P/N	DESCRIPTION
13	1	00204.00	Pump Cover Large
14	1	00203.05	Impeller 4-1/2"
15	1	00202.00	Pump Base
16	1	00205.00	Pump Gasket
17	1	03108.60	Transfer Hose 1" Reinf.
18	1	00208.40	Slip Joint Nut O Ring
19	1	00207.00	Slip Joint Nut 11/2 x 1/4
20	1 1	17570.00 17570.10	Wrap Support Brkt-R Wrap Support Brkt-L
21	1	00563.40	Door Switch Bracket (8-08)
22	1	00563.43	Door Switch Actuator CMA-180T (1-10)
23	2	00602.20	Door Spring - Heavy Duty

1.2.16. Unique Parts for CMA-180T Split Door

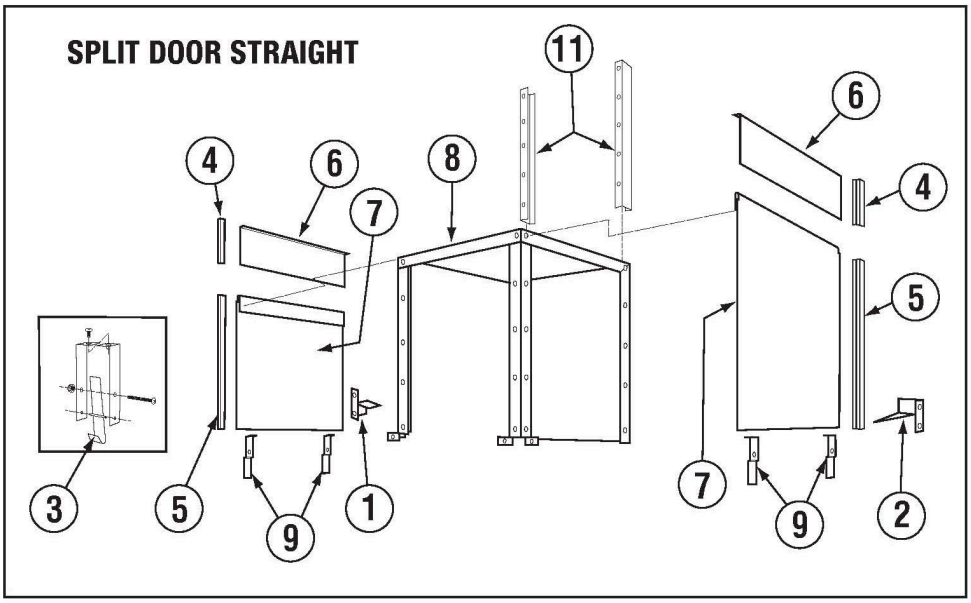

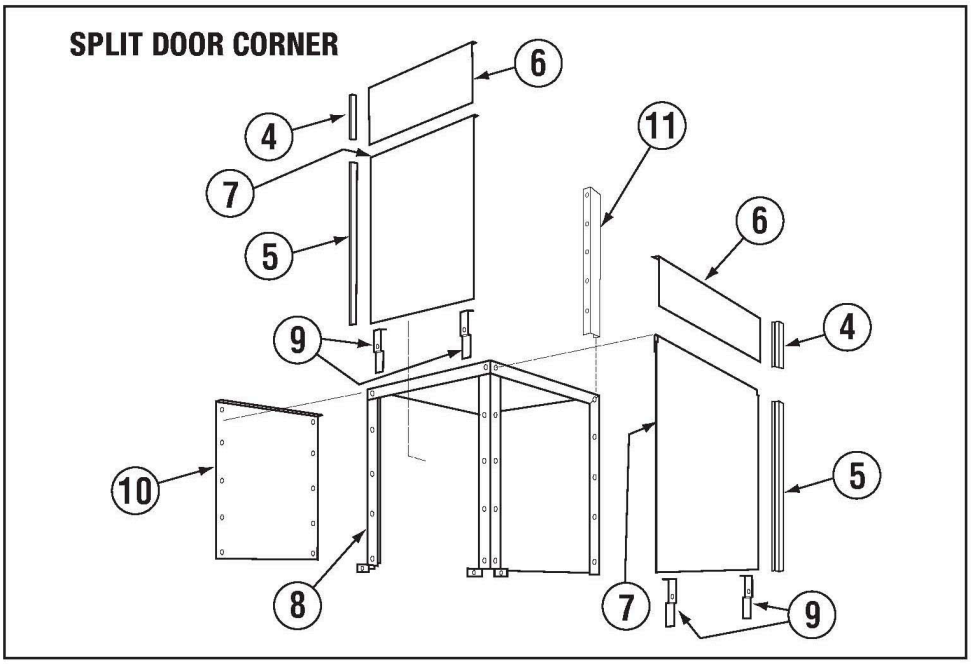

ITEM NO.	NO. STR/COR	P/N	DESCRIPTION
1	1/0	17506.23	Door Safety Brkt. Left
2	1/0	17506.24	Door Safety Brkt. Right
3	1/0	13701.22	Open Door Latch
4	6/4	00636.43	EZ Glide Door Gide 8.5”
5	6/4	00636.42	EZ Glide Door Gide 29.75”
6	3/2	17506.42	Small Door

ITEM NO.	NO. STR/COR	P/N	DESCRIPTION
7	3/2	17506.34	Large Door
8	1/1	17530.22	Wrapper
9	6/4	17552.22	Door Stop
10	0/1	17530.23	Corner Panel Wrap
11	1/1	17570.00	Wrap Support Brkt-R
	1/0	17570.10	Wrap Support Brkt-L

1.2.17. Water Tempering Kit (Optional)

CMA-180VL
WATER TEMPERING VALVE KIT
P/N 13470.30

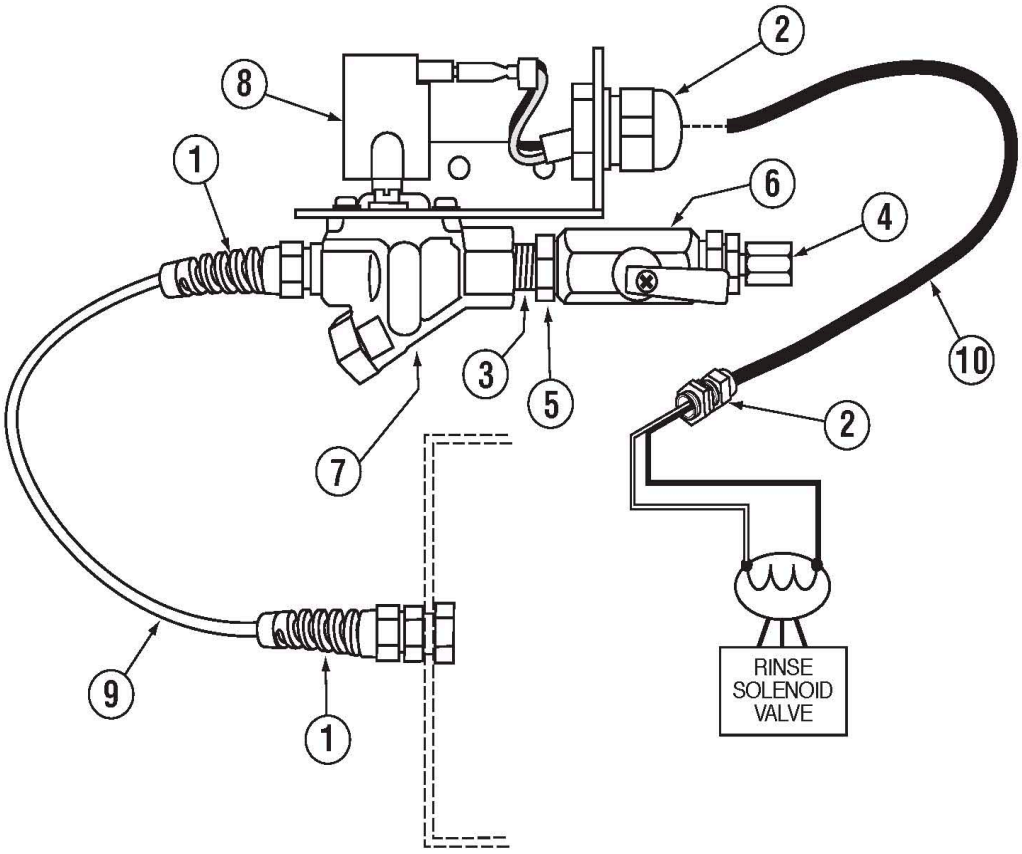

ITEM NO.	P/N	NO REQ'D	DESCRIPTION
1.	03415.50	2	FLEX TIGHT FITTING
2.	00562.60	2	CONNECTOR-#562 DOOR ROLLER SWITCH
3.	41011.00	2	NIPPLE BRASS 1/4" CLOSE
4.	40112.00	1	1/4" COMP X 1/4" MIP EII
5.	40015.00	2	3/8" MPI X 1/4" HEX FPT BUSHING
6.	41014.49	1	3/8" BALL VALVE
7.	41015.00	1	SOLENOID VALVE 1/4" W/COVER 115V
8.	41015.75	1	WATER SOLENOID VALVE COIL 220V DEMA
9.	00425.54	4	1/4" WATER LINE
10.	00547.00	4	ELECTRICAL CORD

8-2019