MODEL EST44

PARTS MANUAL

Rev.2.07C
04-06-2023

CMA DISHMACHINES
12700 KNOTT STREET
GARDEN GROVE
CALIFORNIA 92841

800-854-6417
FAX 714-895-2141

www.cmadishmachines.com
Buy Parts

Table of Contents

EST-44

1. PARTS MANUAL 3

1.1. Initial Parts Kit 3

1.2. Exploded View Drawings 4

1.2.1. Cabinet Assembly 4

1.2.2. Control Box Assembly (3 Phase) 5

1.2.1. Control Box Assembly (1 Phase) 6

1.2.1. 480V Control Box Assembly (480V machines only) 7

1.2.2. Curtain and Optional Vent System 8

1.2.3. Old Wash Temperature Control System (Square Flange) 9

1.2.4. New Wash Temperature Control System (Triangular Flange) 10

1.2.5. Rinse Temperature Control System 11

1.2.6. Wash Pump Assembly (3 Phase) 12

1.2.7. Wash Pump Assembly (1 Phase) 13

1.2.8. Power Rinse Pump Assembly 14

1.2.9. Drain System Assembly 15

1.2.10. Plumbing System Assembly (Auto-Fill) 16

1.2.11. Plumbing System Assembly (Final Rinse) 17

1.2.12. Wash System Assembly 18

1.2.13. Rocker Arm Assembly 19

1.2.14. Start Switch and Rinse Switch Assembly (Effective May 2014) 20

1.2.14.1. Right-to-Left Assembly 20

1.2.14.2. Left-to-Right Assembly 21

1.2.15. Start Switch and Rinse Switch Assembly 22

1.2.16. Door Switch Assembly (Effective August, 2014) 23

1.2.1. Optional E-Temp Heater (Effective September 1, 2018) 24

1.2.2. Optional E-Temp Heater 25

1.2.3. Unique Parts For EST-44 Tall machines 26

2. TABLE LIMIT SWITCH (P/N 13469.20) 27

3. DRAIN WATER TEMPERING KIT (OPTIONAL) ..... 28 & 29

www.cmadishmachines.com

Buy Parts

1. Parts Manual

1.1. Initial Parts Kit

P/N	DESCRIPTION	Qty
00120.02	Bi Metal Thermometer	1
00201.85	Pump Motor, 1HP, 3Ph, 60 Hz, 220V	1
00206.30	Pump Seal Kit	1
00208.21	Slip Joint Nut Friction Ring Plastic	1
00208.40	Slip Joint Nut Gasket	1
00421.83	Power Rocker Switch, Red	1
00562.00	Door Roller Switch	1
00631.05	Ice Cube Relay 220V 12Amp	1
00707.00	½" Water Solenoid Repair Kit JE	1
00738.15	Solenoid Coil JE 220V	1
03202.00	Thermometer (Capillary)	1
03226.00	Pump O-Ring Gasket	1
03623.00	½ Vac Breaker Repair Kit Watts	1
13003.17	Contactor, 60-Amp	1
13003.50	Contactor, 30-Amp	1
13003.70	Toggle Switch SPDT 20AMP	1
13012.26	Motor Contactor, 220V	1
13013.45	Conveyor Motor Overload Relay	1
13014.40	Power Rinse Overload Relay	1
13403.26	Fuse, 3-Amp/250V Slow Blow	2
13408.64	Table Limit Switch Bracket Spring	1
13415.47	Heater 3kW (GL-C & EST-66)	1
13417.92	Heater Thermostat	1
13418.60	Dip Switch Timer 230V	1
13422.83	Immersion Heater, 3Ph/1Ph, 208, 13kW	1
13427.10	Table Limit Switch	1
13465.00	Dual Float Switch, SS	1
13503.60	Power Rinse Pump - 1ph 208-240v 60HZ	1
13503.06	EST-44 Gear Motor Assy	1
13507.65	Cam Bearing Assy (New Dec 2007)	1
13508.70	Heavy Duty Clutch Spring	1

1.2. Exploded View Drawings

1.2.1. Cabinet Assembly

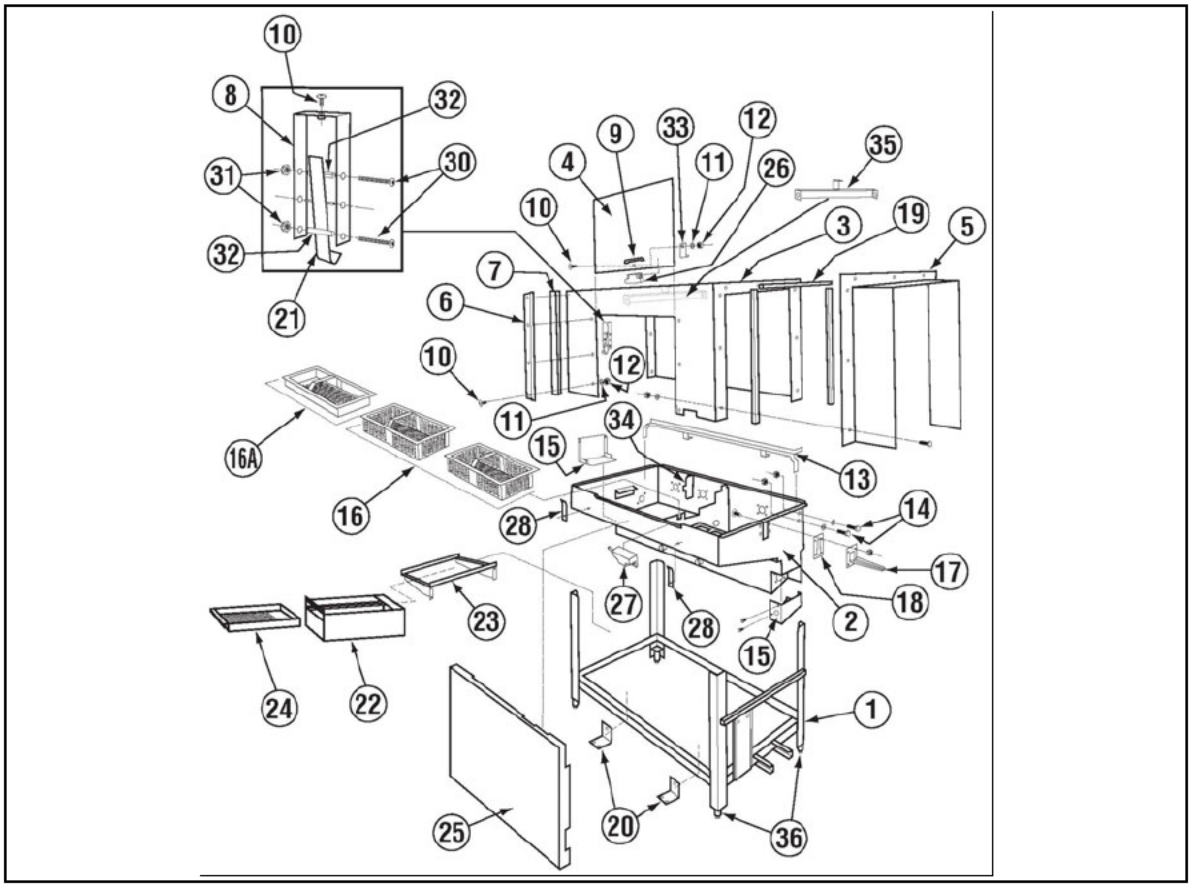

ITEM NO.	NO. REQ'D	P/N	DESCRIPTION
1	1	13939.22	Universal CMA-44/EST Stand
2	1	13969.36	EST-44 Pan L-R
		13969.26	EST-44 Pan R-L
3	1	13939.09	EST-44 Wrapper L-R
		13939.19	EST-44 Wrapper R/L
4	1	01506.54	EST-44 Door L-R
		01506.52	EST-44 Door R-L
5	2	13901.10	Wrapper Shield
6	2	01554.30	Door Guide
7	2	00636.10	Door Guide Plastic
8	1	13915.60	Door Latch Bracket Single Piece
9	1	00535.30	Door Handle
10	28	00905.00	1/4-20 x 1/2" Trusshead Bolt
11	61	00924.00	1/4" Washer, SS
12	53	00912.00	1/4-20 Nylon Lock Nut
13	2	13906.17	EST-44 Tray Track RH
		13906.19	EST-44 Tray Track LH
14	8	00914.10	1/4-20 x 5/8" Hex Head Bolt
15	2	13939.50	EST-44 Heater Cover
16	2	13942.30	Strainer Basket EST44 (3" deep)
16A	1	13942.00	Strainer Basket, Wash/Rinse EST44/66

ITEM NO.	NO. REQ'D	P/N	DESCRIPTION
17	1	13913.10	Drip Chute
18	1	13542.10	Drip Chute Gasket
19	4	03705.00	Foam Tape
20	2	13010.06	Drain Valve Handle Support
21	1	13701.00	Door Latch
22	1	01579.10	Scrap Trap Body (Univ)
23	1	17579.20	EST Scrap Trap Holder
24	1	01579.20	Scrap Trap Drawer (Univ)
25	1	13912.14	CMA 44 Splash Shield (09)
26	1	00556.60	Reed Switch Magnet -ISI
27	1	00556.10	Reed Switch-ISI
28	2	13912.81	Splash Shield Clip
29	1	01577.36	Scrap Trap Cover SS (Hi Temp)
30	1	00960.00	8-32x1-1/2" Panhead Screw
31	1	00927.00	8-32 Nylon Lock Nut
32	2	13915.30	Door Latch Bracket Spacer
33	1	13701.30	Door Stop Bracket
34	2	01505.15	EST-44 Support Bracket Tray Track
35	1	13949.10	EST-44/66 Wrapper Brace
36	4	01310.30	Adjustable Foot w/ SS Toe

Buy Parts

1.2.2. Control Box Assembly (3 Phase)

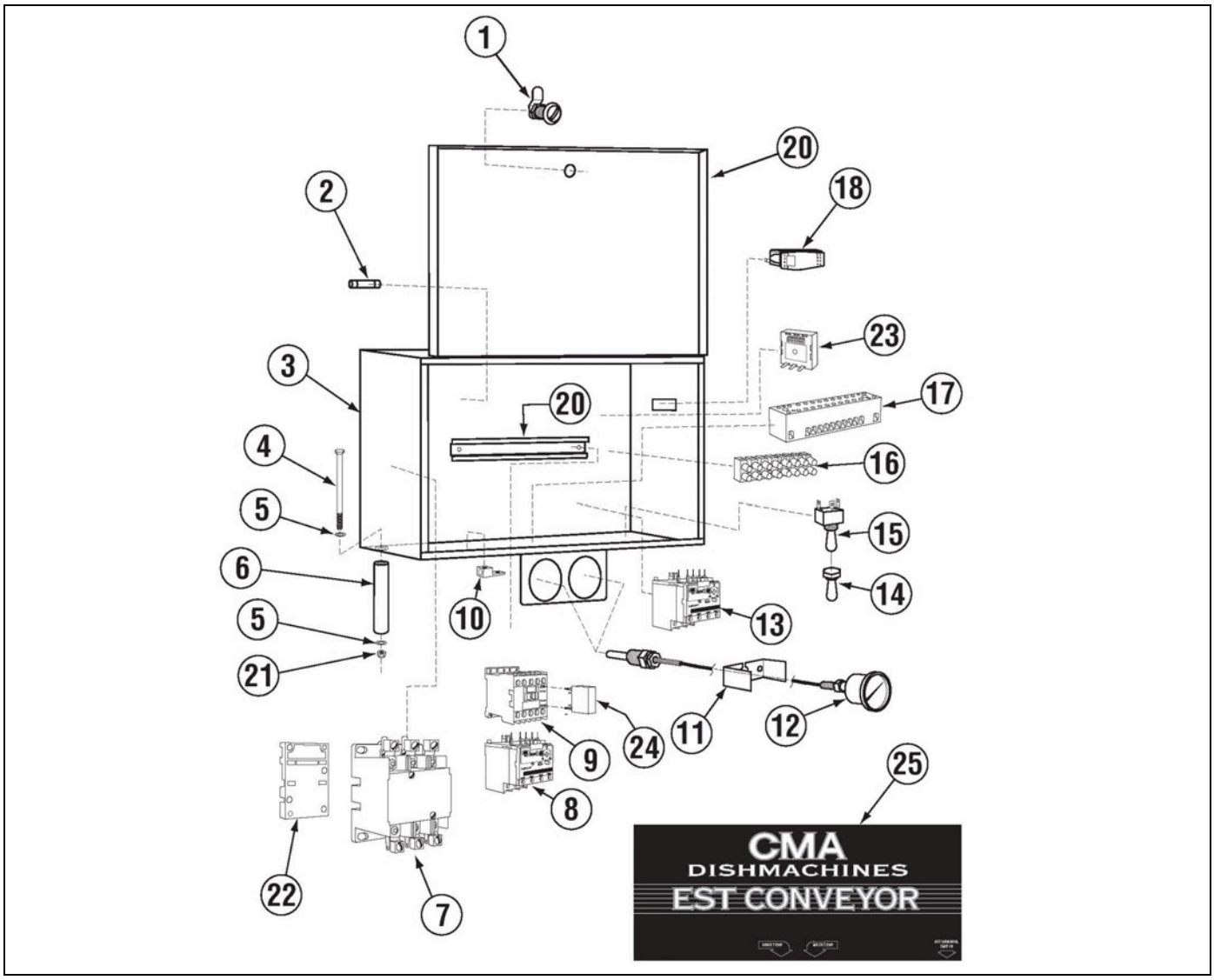

ITEM NO.	NO. REQ'D	P/N	DESCRIPTION
1	1	00449.50	Lock, Keyless
2	2	13403.26	Fuse, 3-Amp/250V Slow Blow
3	1	13941.12	EST-44 Control Box Body
4	4	00909.00	¼-20x3 ¼ SS Hexhead Bolt
5	8	00924.00	¼ SS Washer
6	4	13941.20	EST-44 Control Box Legs
7	2	13003.17	Contactor 60 Amp 3 Pole
8	1	13013.45	Overload Relay 0.4 to 0.63 Conveyor
9	4	13012.26	Motor Contactor, 220V
10	1	13426.50	Ground Block
11	2	03202.08	Thermometer Bracket
12	2	03202.00	Thermometer
13	1	13014.40	Overload Relay 1.6 to 2.5 Power Rinse

ITEM NO.	NO. REQ'D	P/N	DESCRIPTION
14	1	00470.10	Toggle Switch Rubber Boot
15	1	13003.70	Toggle Switch SPDT 20AMP
16	1	00454.20	8-Pole Terminal Block
17	1	15520.00	Power Block 12-Position
18	1	00421.83	Power Rocker Switch, Red
19	1	13003.60	Starter DIN Rail
20	1	13941.22	EST-44 Control box lid
21	4	00912.00	¼-20 Nylon Lock Nut
22	2	13003.62	Din Rail Mounting Bracket
23	1	13418.60	Dip Switch Timer 230 V
24	3	13012.29	Surge Absorber
25	1	06232.20	EST Conveyor Label Full Size label

1.2.1. Control Box Assembly (1 Phase)

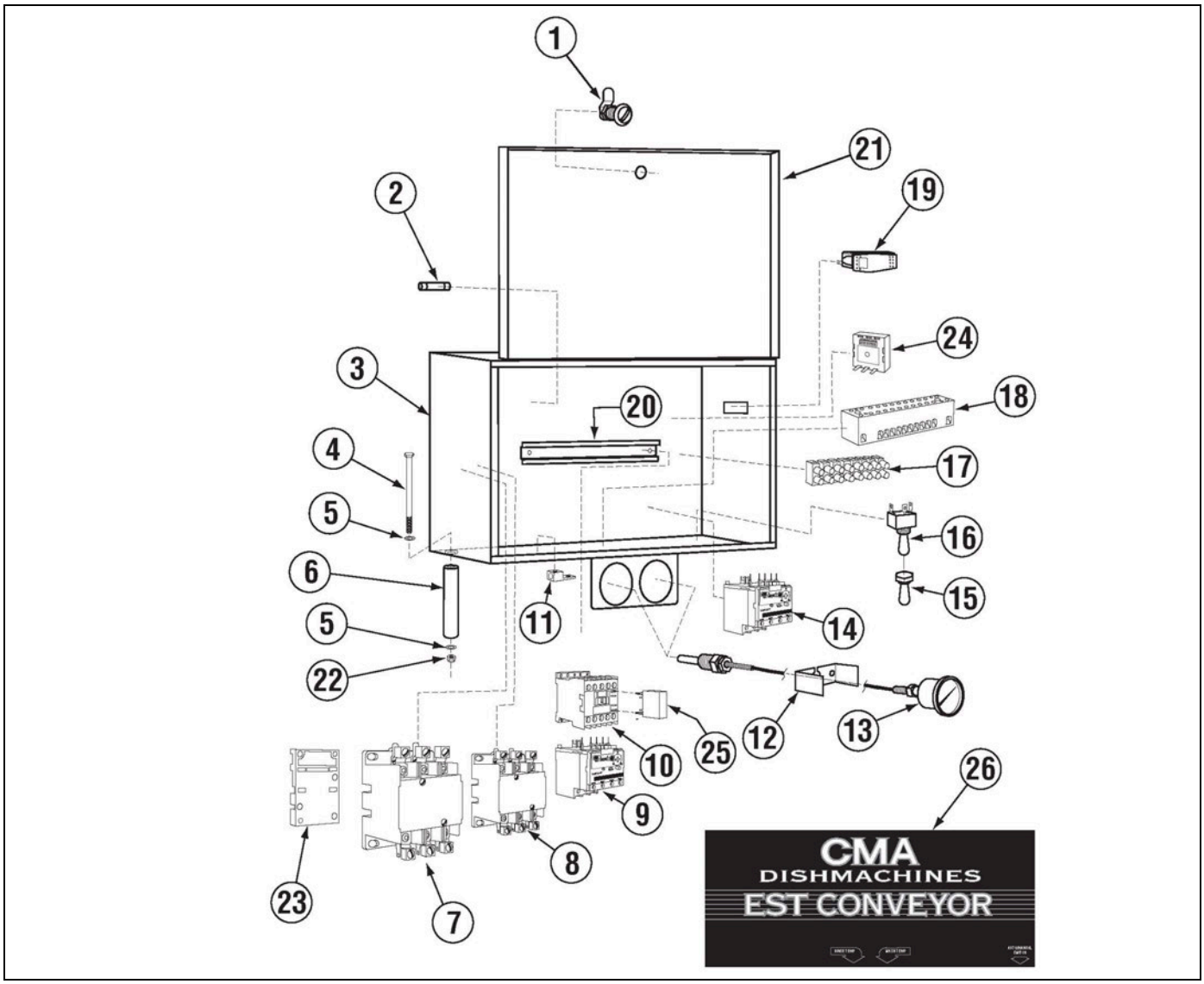

ITEM NO.	NO. REQ'D	P/N	DESCRIPTION
1	1	00449.50	Lock, Keyless
2	2	13403.26	Fuse, 3-Amp/250V Slow Blow
3	1	13941.12	EST-44 Control Box Body
4	4	00909.00	¼-20x3 ¼ SS Hexhead Bolt
5	8	00924.00	¼ SS Washer
6	4	13941.20	EST-44 Control Box Legs
7	1	13003.18	Contactor 75 Amp 3 Pole
8	1	13003.17	Contactor 60 Amp 3 Pole
9	1	13014.48	Overload Relay 0.63 to 1.0 Conveyor
10	4	13012.26	Motor Contactor, 220V
11	1	13426.50	Ground Block
12	2	03202.08	Thermometer Bracket
13	2	03202.00	Thermometer

ITEM NO.	NO. REQ'D	P/N	DESCRIPTION
14	1	13014.40	Overload Relay 1.6 to 2.5 Power Rinse
15	1	00470.10	Toggle Switch Rubber Boot
16	1	13003.70	Toggle Switch SPDT 20AMP
17	1	00454.20	8-Pole Terminal Block
18	1	15520.00	Power Block 12-Position
19	1	00421.83	Power Rocker Switch, Red
20	1	13003.60	Starter DIN Rail
21	1	13941.22	EST-44 Control box lid
22	4	00912.00	¼-20 Nylon Lock Nut
23	2	13003.62	Din Rail Mounting Bracket
24	1	13418.60	Dip Switch Timer 230 V
25	3	13012.29	Surge Absorber
26	1	06232.20	EST Conveyor Label Full Size label

1.2.1. 480V Control Box Assembly (480V machines only)

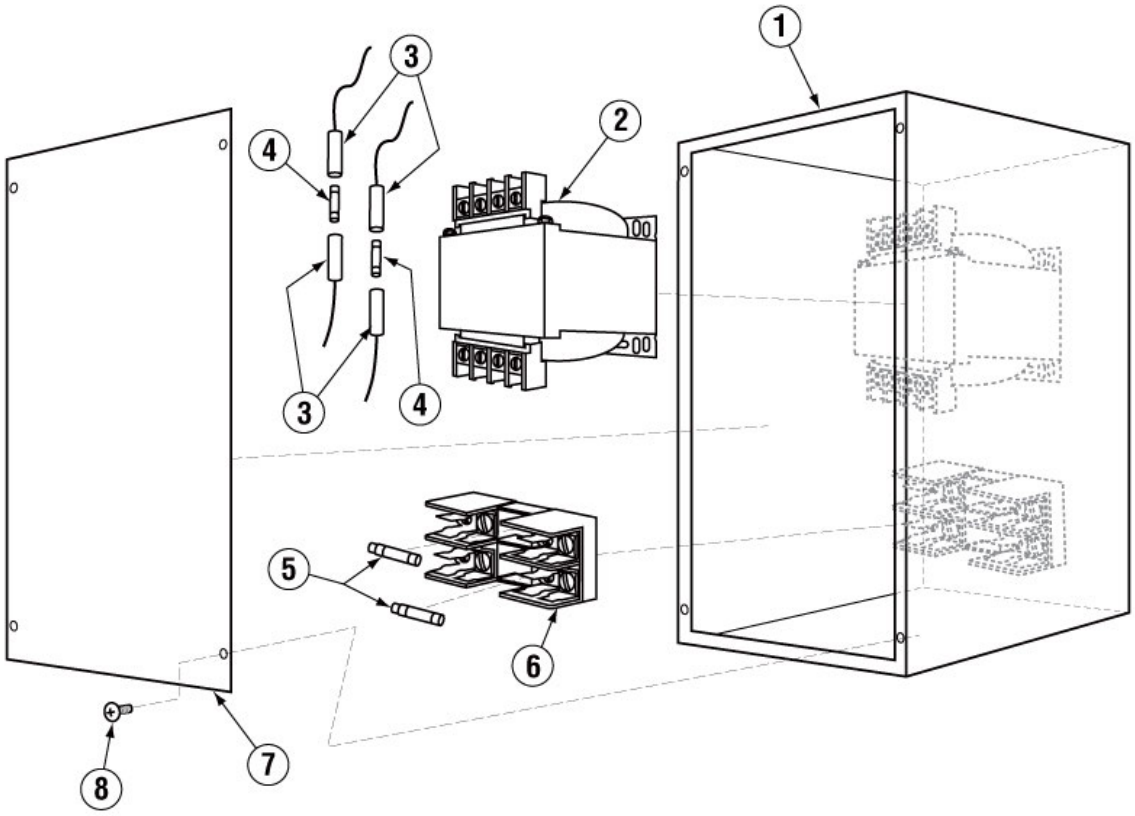

ITEM NO.	NO. REQ'D	P/N	DESCRIPTION
1	1	13905.13	Transformer Box
2	1	13423.82	Transformer 480V - 240V
3	2	13403.21	Fuse Holder - Inline
4	2	13403.40	Fuse 1.25 Amp 230V Slow Blow
5	2	13402.10	Fuse 1.50 Amp 600V Slow Blow
6	1	13420.10	Fuse Clip 2-Poll, Pressure Plate
7	1	13905.23	Transformer Box Lid
8	4	00940.50	10-32 X 3/8 Truss Head Screw

1.2.2. Curtain and Optional Vent System

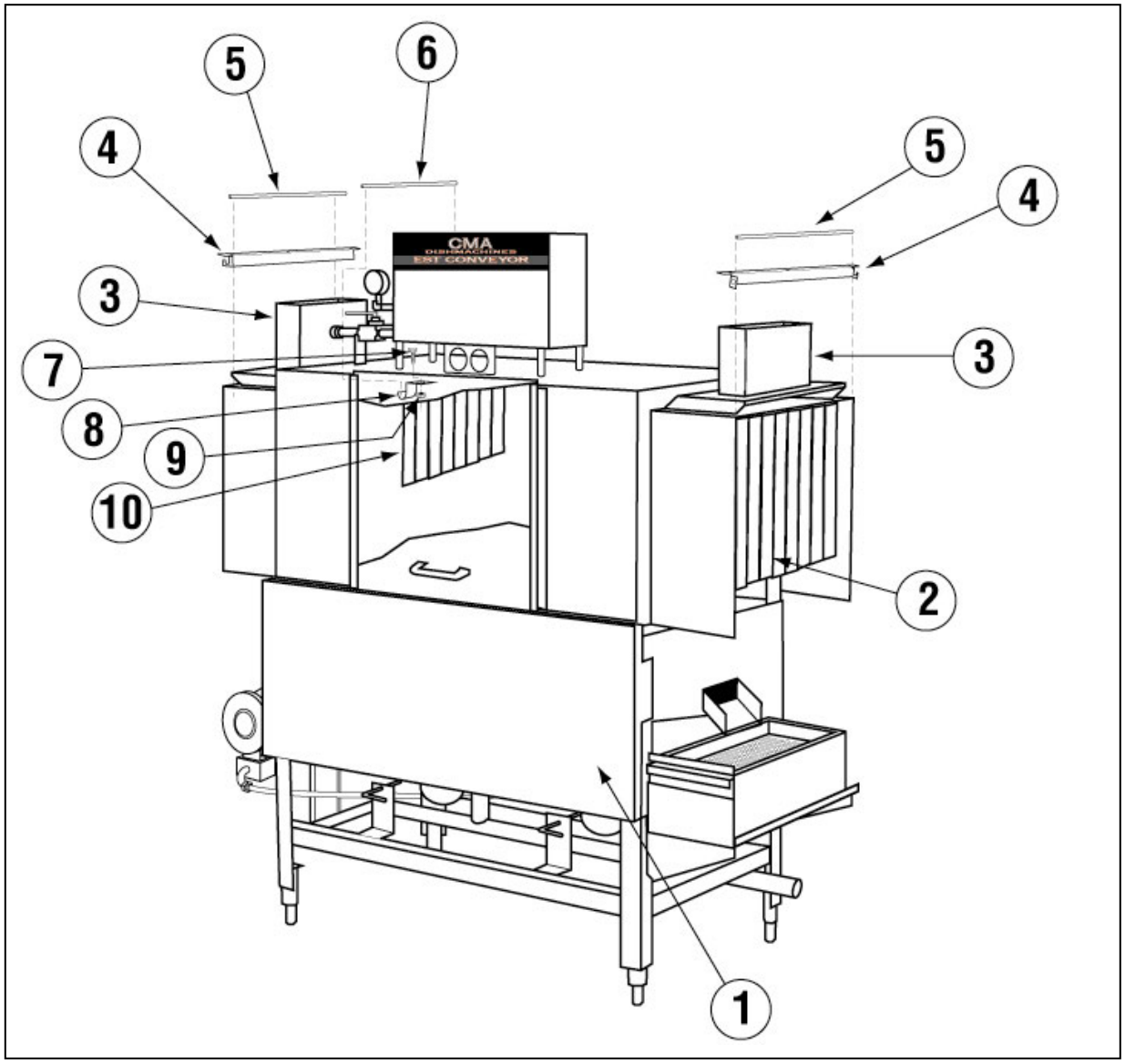

ITEM NO.	NO. REQ'D	P/N	DESCRIPTION
1	1	13912.14	CMA 44 Splash Shield (09)
2	2	13702.25	Curtain CMA-44(20-5/8" x 15")
3	2	13901.82	Hood Adapter EST-44 (2 pc set)
4	2	13901.30	Outer Wrap Shield Curtain Support
5	2	13705.00	Curtain Rod Short

ITEM NO.	NO. REQ'D	P/N	DESCRIPTION
6	2	13705.10	Curtain Rod Long
7	4	00914.10	1/4-20 X 5/8 Hexhead Bolt
8	2	13901.12	CMA 44 Wash Curtain Support ('07)
9	4	00912.00	1/4-20 Nylon Lock Nut
10	1	13702.35	Curtain CMA-44 (24 5/8" x 11-1/2")

Curtains for TALL CMA-44

Other unique parts for TALL machine see page 26

ITEM NO.	NO. REQ'D	P/N	DESCRIPTION
2A	1	13703.61	Curtain, Long, CMA-44 (20 5/8x21)
10A	1	13702.30	Curtain, Short, CMA-44 (24 5/8x15)

1.2.3. Old Wash Temperature Control System (Square Flange)

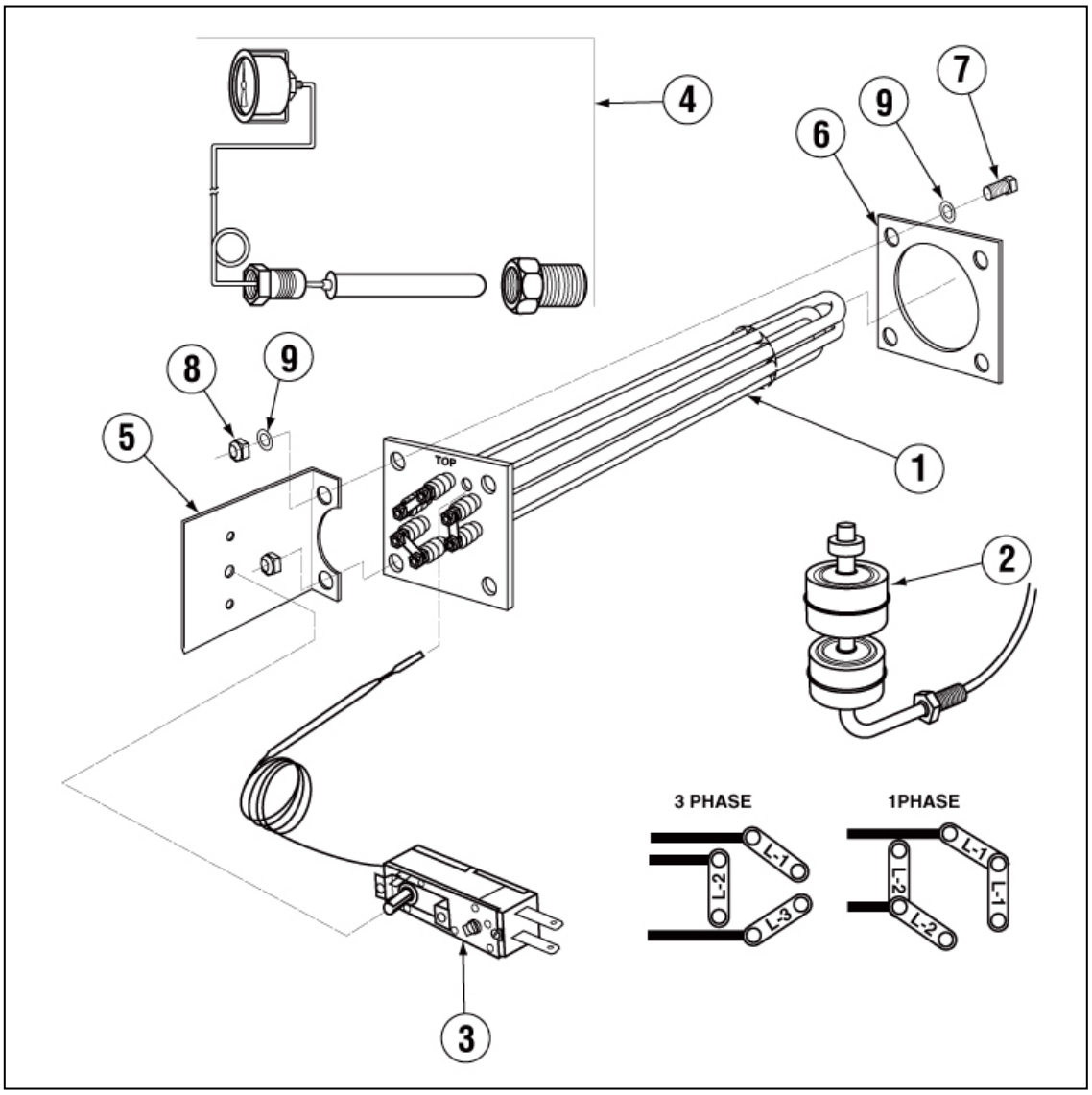

ITEM NO.	NO. REQ'D	P/N	DESCRIPTION
1	1	13417.75	Immersion Heater 3hp/1PH 380V 10kW
	1	13417.80	Immersion Heater 3Ph/1PH 240V 10kW
2	1	13465.00	EST-44/66 Dual Float Switch
3	1	13417.92	Thermostat (EGO)
4	1	03202.00	Thermometer

ITEM NO.	NO. REQ'D	P/N	DESCRIPTION
5	1	13416.10	Thermostat Bracket
6	1	13417.45	Heater Gasket
7	4	00901.00	5/16 – 18 x 1" Hexhead Bolt
8	4	13805.00	5/16 – 18 Nylon Nut
9	8	00926.00	5/16" SS washer

1.2.4. New Wash Temperature Control System (Triangular Flange)

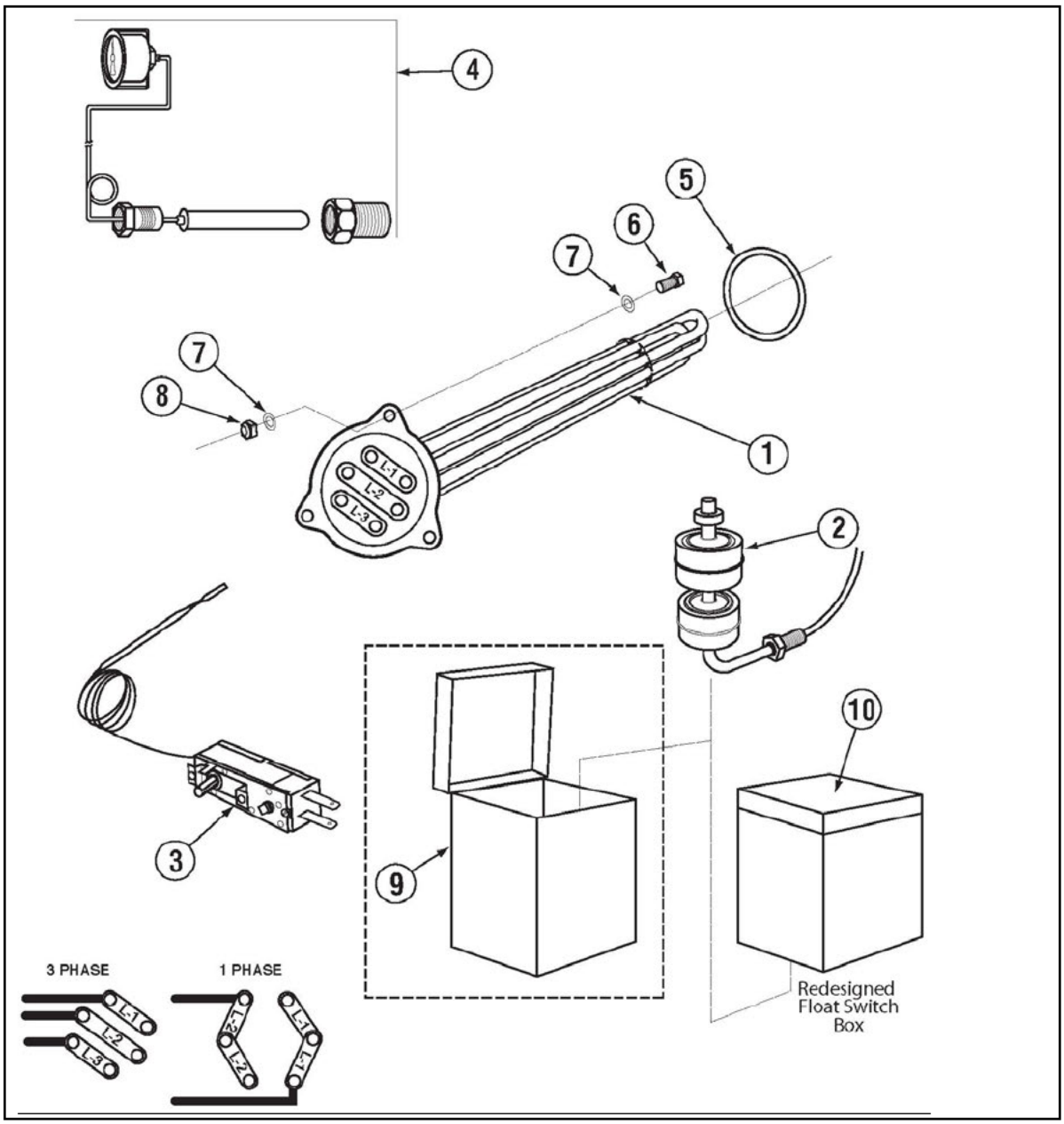

ITEM NO.	NO. REQ'D	P/N	DESCRIPTION
1	1	13422.75	480V 12KW Triangular Immersion Htr.
	1	13422.80	208V 10KW Triangular Immersion Htr.*
	1	13422.83	208V 13KW Triangular Immersion Htr.**
2	1	13465.00	EST-44/66 Dual Float Switch
3	1	13417.92	Thermostat (EGO)
4	1	03202.00	Thermometer

ITEM NO.	NO. REQ'D	P/N	DESCRIPTION
5	1	15518.11	Heater Gasket
6	4	00914.00	1/4-20 X 3/4 Hexhead Bolt
7	8	00924.00	1/4" SS washer
8	4	00912.00	1/4-20 Nylon Lock Nut
9	1	13943.00	Float Switch Box
10	1	13946.00	Float Switch Box (comes with # 13946.50)

* For single phase machines ** For three phase machines.

Buy Parts

1.2.5. Rinse Temperature Control System

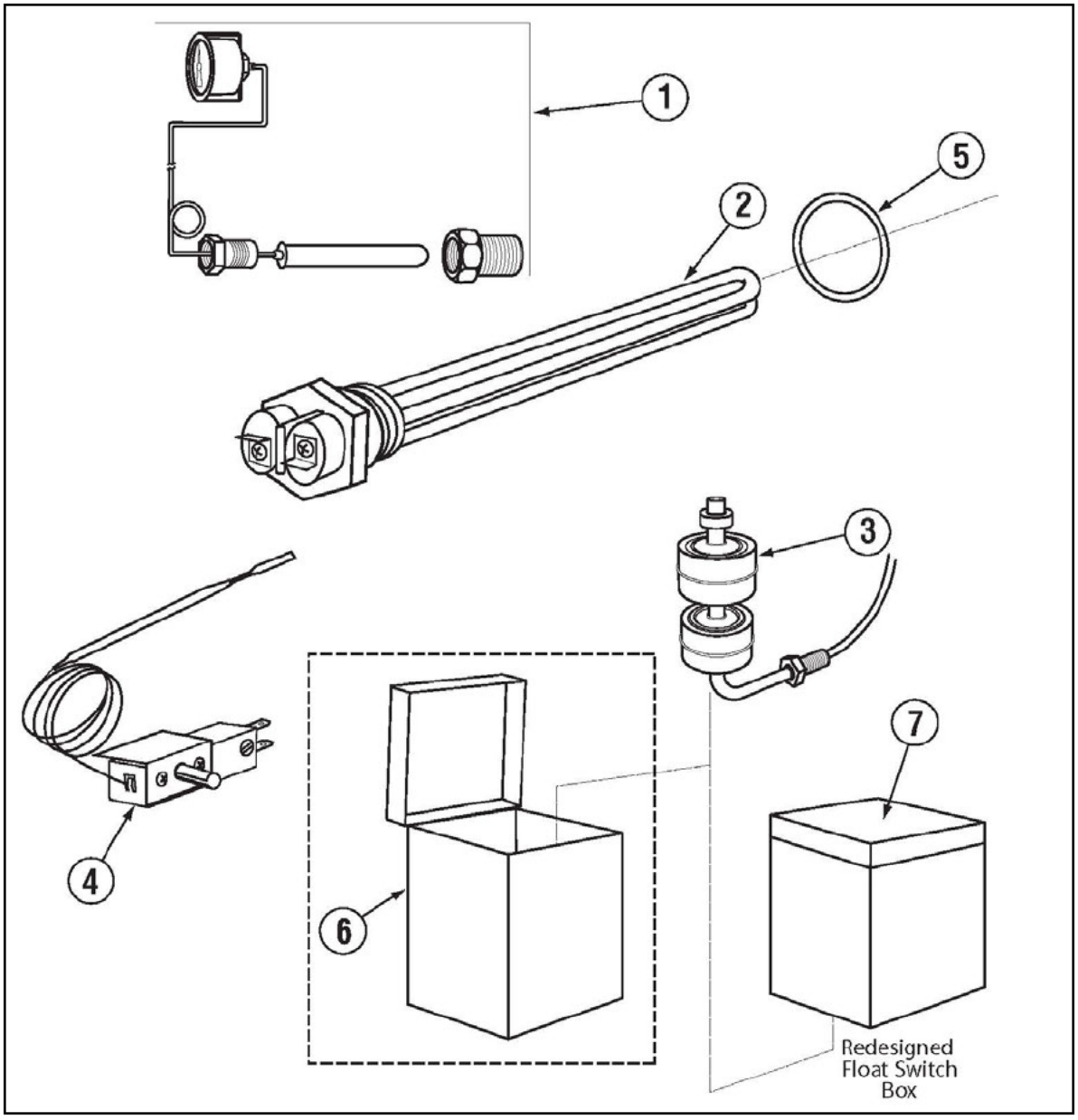

ITEM NO.	NO. REQ'D	P/N	DESCRIPTION
1	1	03202.00	Thermometer
2	1	13415.47 13955.00	Heater 3kW (GL-C & EST-66) Immersion Heater 3kW 480V
3	1	13465.00	Float Switch
4	1	13417.92	EST-66 Heater Thermostat (EGO)
5	1	00703.00	O-Ring Gasket
6	1	13943.00	Float Switch Box
7	1	13946.00	Float Switch Box (comes with # 13946.50)

1.2.6. Wash Pump Assembly (3 Phase)

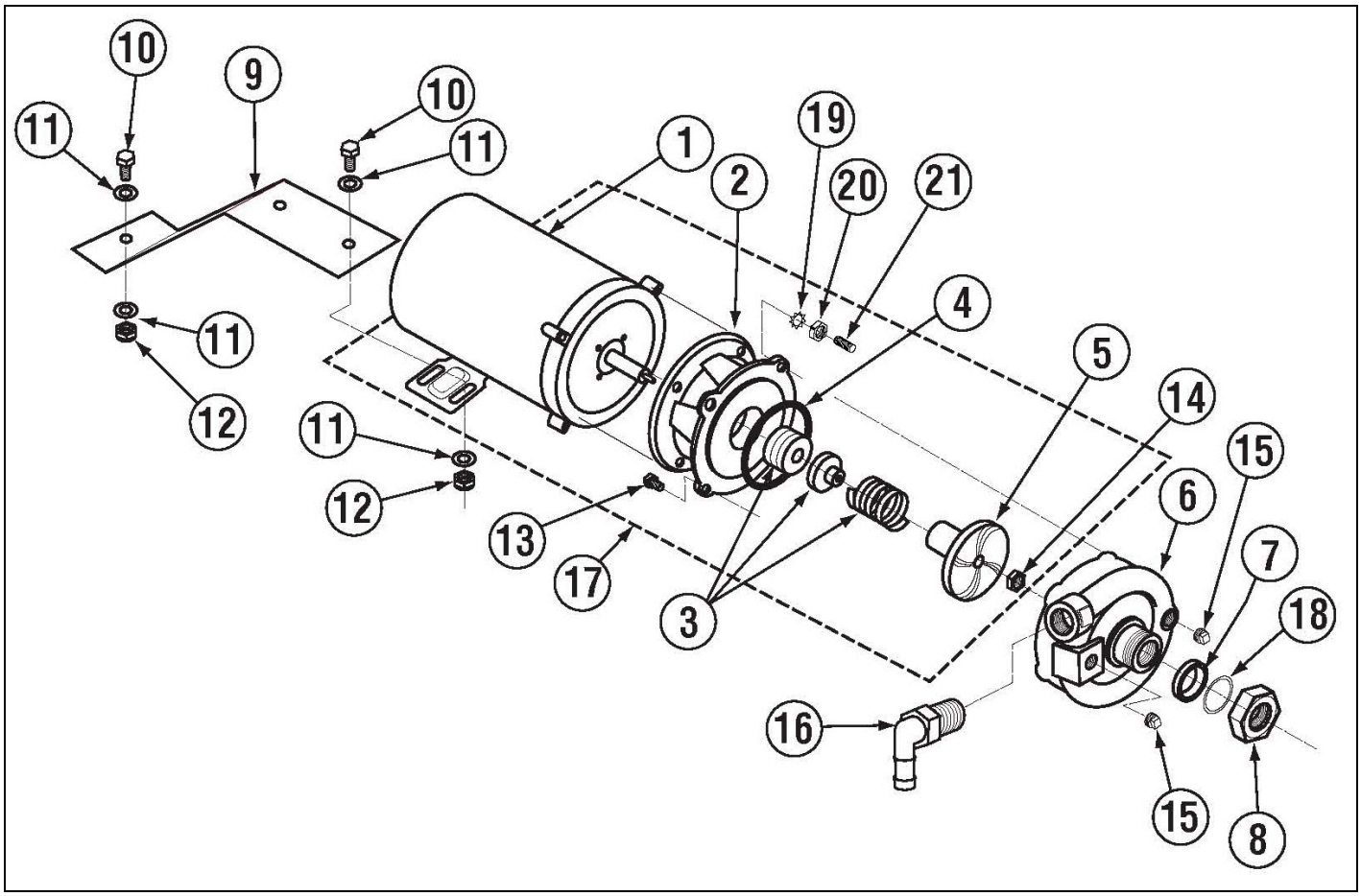

ITEM NO.	NO. REQ'D	P/N	DESCRIPTION
1	1	00201.85	Pump Motor,1HP,60 Hz, 220/460V
2	1	04207.10	Pump Base Mount
3	1	00206.30	Pump Seal Kit New
4	1	03226.00	Pump O-Ring Gasket
5	1	03222.10	Impeller (Open) SS
6	1	04207.20	Pump Cover
7	1	00208.40	Slip Joint Nut Gasket
8	1	00207.00	Compression Nut, 2.5"
9	1	13916.40	Motor Support Bracket
10	3	00906.00	1/4-20 x 1/2" Hex Bolt
11	6	00922.00	1/4" Lock Star Washer

ITEM NO.	NO. REQ'D	P/N	DESCRIPTION
12	3	00912.00	1/4-20 Nylon Lock Nut
13	8	00921.00	3/8-16 x 3/4" SS Hex Head Bolt
14	1	13829.00	7/16-20 Thin Nylon Lock Nut
15	2	00238.00	3/8" Male Plug
16	1	04604.00	^35 Deg Elbow MIP X Barb SS
17	1	00200.85	Pump Assembly, 1HP, 3Ph, 220V, 60 Hz*
18	1	00208.21	Slip Joint Nut Friction Ring
19	2	03807.50	3/8 External Lock Star Washer
20	2	03810.00	3/8-16 Thin Nut
21	2	00975.00	3/8"-16 x 1 ½" SS Stud

**Includes Items 1, 2, 3, 4, 5 and 14.*

1.2.7. Wash Pump Assembly (1 Phase)

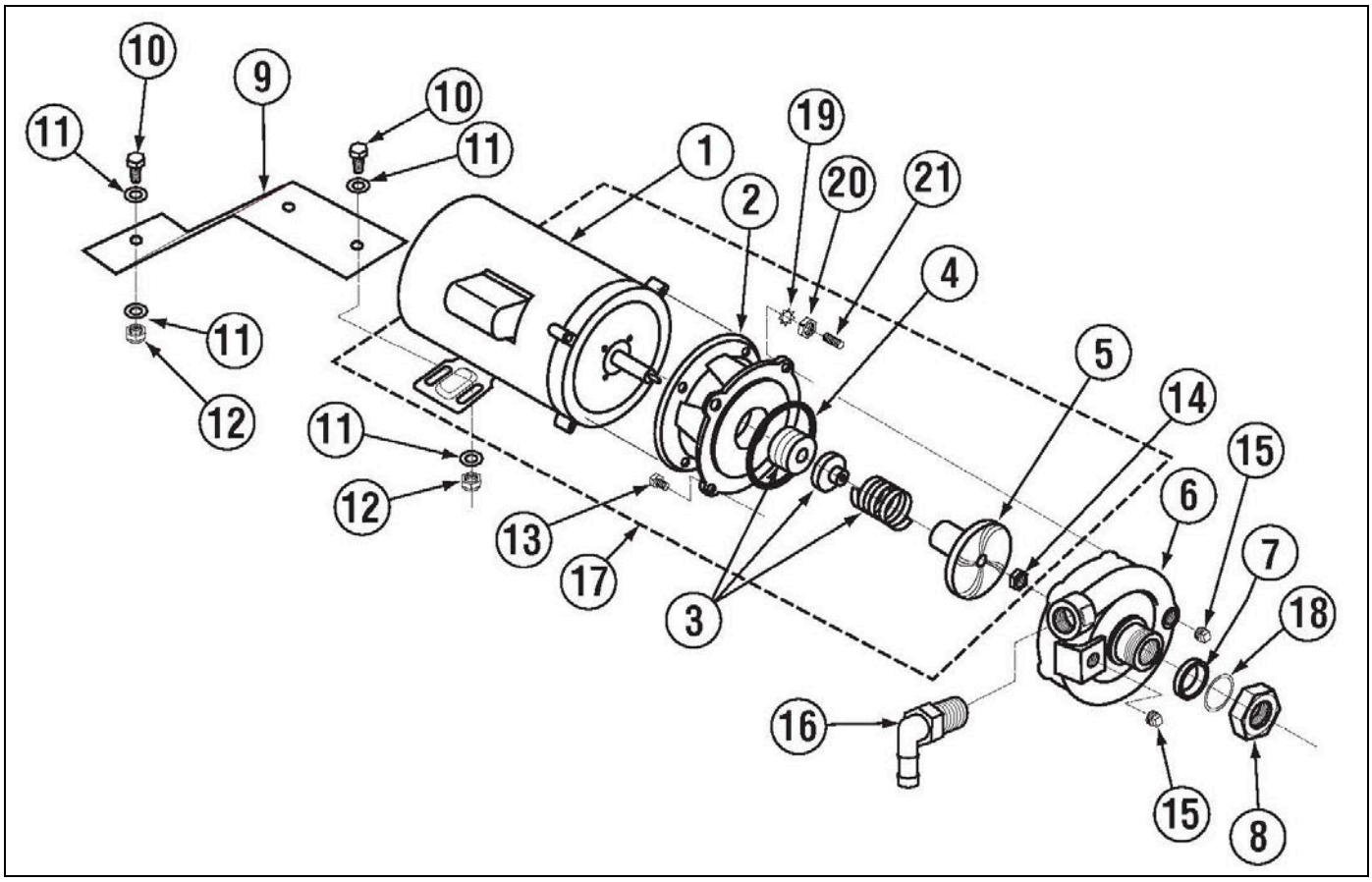

ITEM NO.	NO. REQ'D	P/N	DESCRIPTION
1	1	00201.00	Pump Motor 1 Hp,115/220V ,60Hz
2	1	04207.10	Pump Base Mount
3	1	00206.30	Pump Seal Kit New
4	1	03226.00	Pump O-Ring Gasket
5	1	03222.10	Impeller (Open) SS
6	1	04207.20	Pump Cover
7	1	00208.40	Slip Joint Nut Gasket
8	1	00207.00	Compression Nut, 2.5"
9	1	13916.40	Motor Support Bracket
10	3	00906.00	1/4-20 x 1/2" Hex Bolt
11	6	00922.00	1/4" Lock Star Washer

ITEM NO.	NO. REQ'D	P/N	DESCRIPTION
12	3	00912.00	1/4-20 Nylon Lock Nut
13	8	00921.00	3/8-16 x 3/4" SS Hex Head Bolt
14	1	13829.00	7/16-20 Thin Nylon Lock Nut
15	2	00238.00	3/8" Male Plug
16	1	04604.00	^35 Deg Elbow MIP X Barb SS
17	1	00201.10	Pump Assy 115/220V ,60Hz*
18	1	00208.21	Slip Joint Nut Friction Ring
19	2	03807.50	3/8 External Lock Star Washer
20	2	03810.00	3/8-16 Thin Nut
21	2	00975.00	3/8"-16 x 1 ½" SS Stud

**Includes Items 1, 2, 3, 4, 5 and 14.*

1.2.8. Power Rinse Pump Assembly

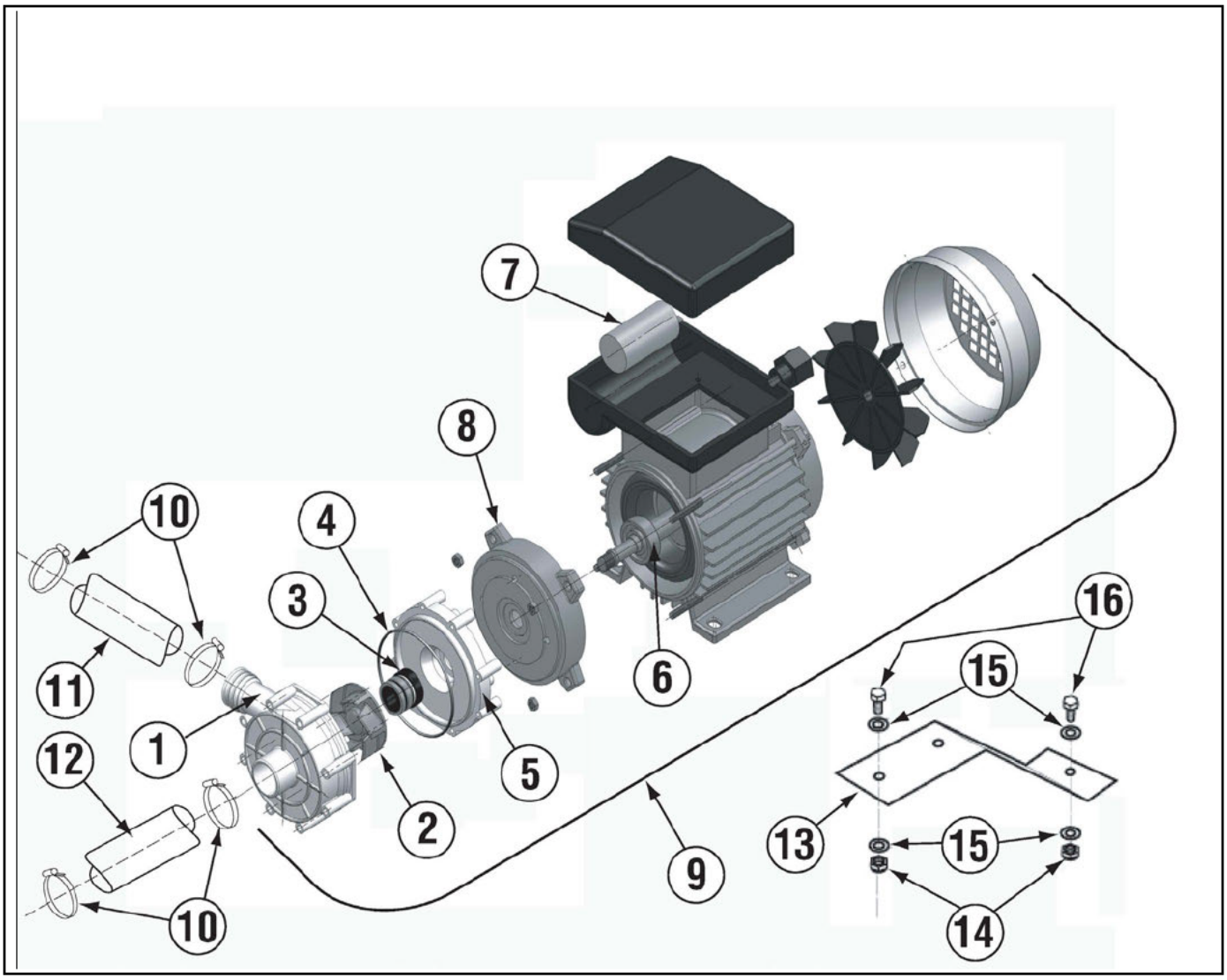

ITEM NO.	NO. REQ'D	P/N	DESCRIPTION
1	1	13503.70	Pump Head
2	1	13503.71	Impeller
3	1	13503.72	Seal Kit
4	1	13503.73	Pump O-Ring
5	1	13503.74	Back Plate
6	1	13503.75	Motor
7	1	13503.76	Capacitor
8	1	13503.77	Cover

ITEM NO.	NO. REQ'D	P/N	DESCRIPTION
9	1	13503.60 13503.80	Olympia Pump - 1ph 208-240v 60HZ Olympia Pump - 3ph 480v, 60HZ
10	4	03101.00	Hose Clamp # 16 1"
11	1	03108.66	Transfer Hose 1" – 35"
12	1	03108.65	Transfer Hose 1" – 3-1/2"
13	1	13916.45	EST-44 Final Rinse Motor Bracket
14	3	00906.00	¼-20x1/2" Hex Bolt
15	6	00922.00	¼-20 Lock Star Washer
16	3	00912.00	¼-20 Nylon Nut

1.2.9. Drain System Assembly

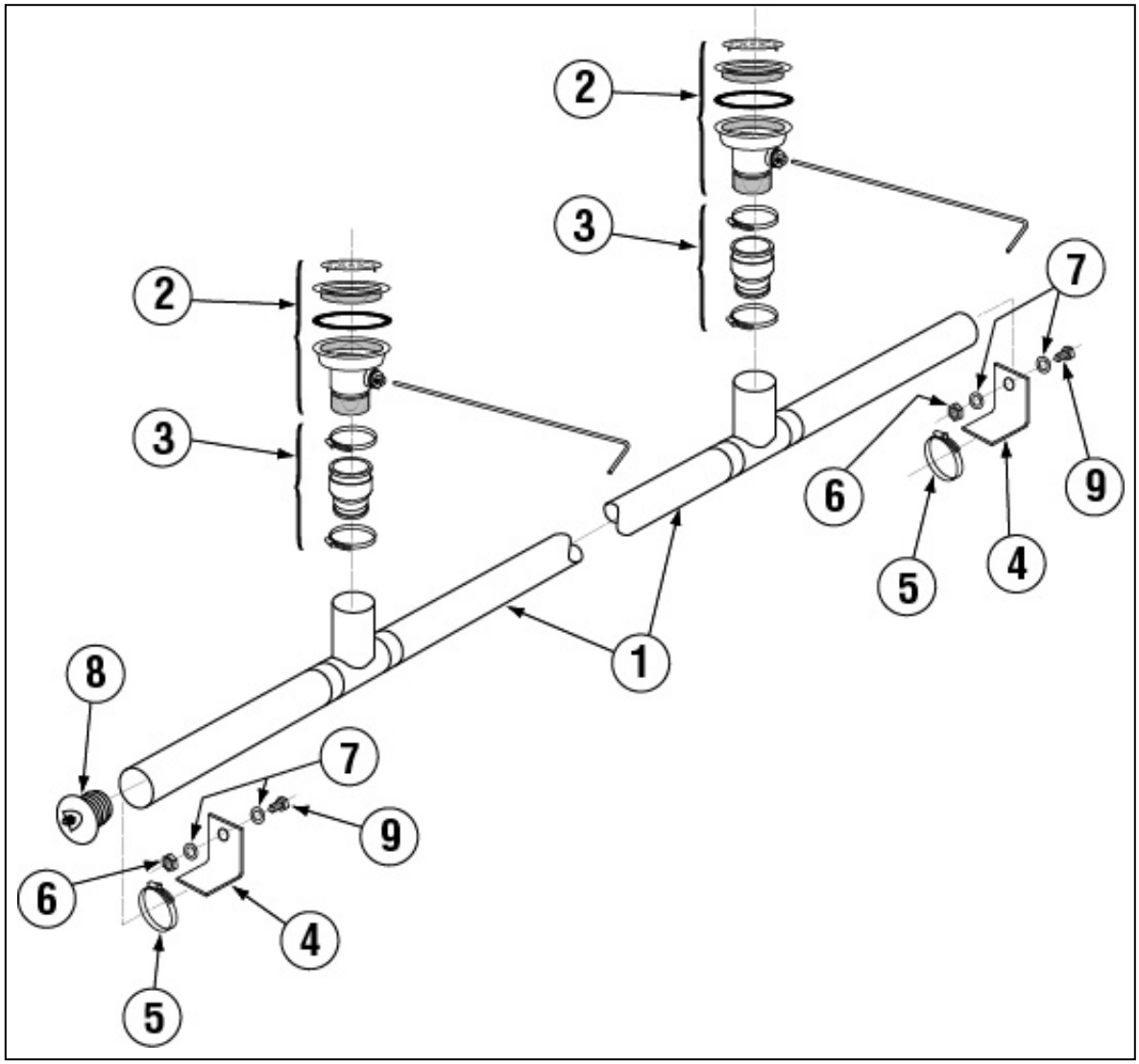

ITEM NO.	NO. REQ'D	P/N	DESCRIPTION
1	1	13001.85	Drain Manifold
2	2	20500.06	Waste Drain Valve
3	2	01317.17	1-1/2" x 2" No Hub
4	2	13001.26	Drain Support Bracket
5	2	50109.00	Hose Clamp

ITEM NO.	NO. REQ'D	P/N	DESCRIPTION
6	2	00912.00	1/4-20 Lock Nut
7	4	00924.00	1/4" Washer, SS
8	1	13024.00	Dynamite Plug, 2"
9	2	00906.0	1/4-20 x 1/2" Hex Head Bolt

1.2.10. Plumbing System Assembly (Auto-Fill)

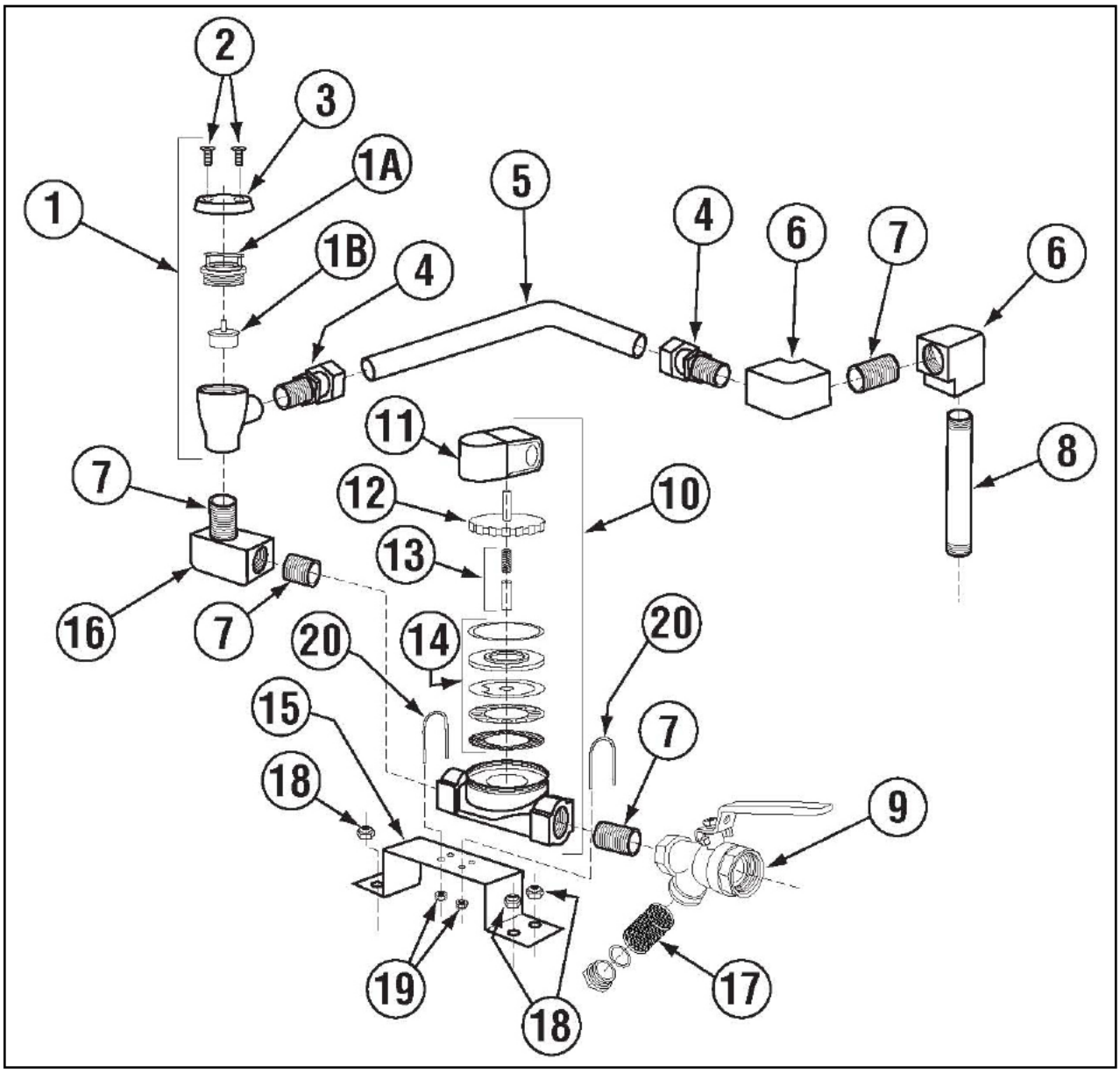

ITEM NO.	NO. REQ'D	P/N	DESCRIPTION
1	1	03624.00	1/2" Vacuum Breaker, Watts**
1A	1	03624.25	1/2" Vacuum Breaker Bonnet
1B	1	03623.00	1/2" Vacuum Breaker Repair Kit
2	2	00421.51	6-32 x 1/4" SS Panhead Screw
3	1	00739.50	Vacuum Breaker Cap
4	2	00760.00	5/8 Comp x 1/2 MIP Adapter
5	1	13608.00	EST-44 Water Inlet Tube SS
6	2	41030.10	1/2 90 Deg Ell Fx F Brass
7	3	00742.00	Nipple Brass 1/2 x 1 1/2
8	1	00747.10	Nipple Brass 1/2 x 5
9	1	41062.00	1/2 Strainer Ball Valve*

ITEM NO.	NO. REQ'D	P/N	DESCRIPTION
10	1	03603.15	1/2" Water Solenoid Valve 220V, JE
11	1	00738.15	Water Solenoid Valve Coil, 220V, ¾" &1/2"
12	1	03603.20	1/2" Water Solenoid Valve Bonnet
13	1	00786.00	Water Solenoid Plunger with Spring
14	1	00707.00	1/2" Water Solenoid Valve Repair Kit
15	1	01525.06	Plumbing Support Bracket
16	1	00745.00	1/2 90 Deg Street E bow
17	1	41062.10	1/2 Ball Valve Strainer
18	4	00912.00	¼-20 Nylon Lock Nut
19	4	00912.00	¼-20 Nylon Lock Nut
20	2	01526.10	Plumbing Bracket Strap

1.2.11. Plumbing System Assembly (Final Rinse)

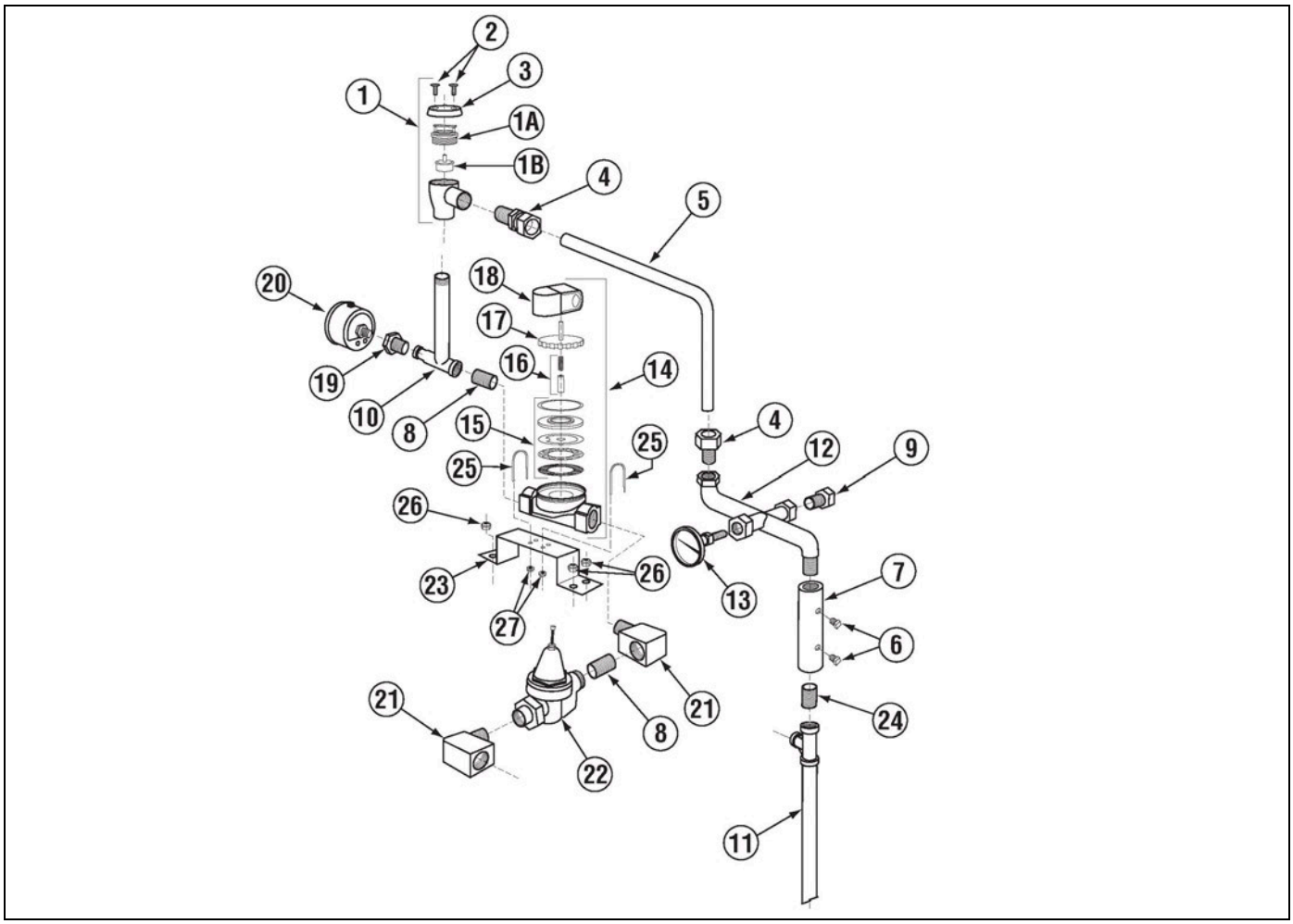

ITEM NO.	NO. REQ'D	P/N	DESCRIPTION
1	1	03624.00	1/2" Vacuum Breaker, Watts**
1A	1	03624.25	1/2" Vacuum Breaker Bonnet
1B	1	03623.00	1/2" Vacuum Breaker Repair Kit
2	2	00421.51	6-32 x 1/4" SS Panhead Screw
3	1	00739.50	Vacuum Breaker Cap
4	2	00760.00	5/8 Comp x 1/2 MIP Adapter
5	1	13608.50	EST-44 Final Rinse Plumbing Tube
	1	13608.55	Same, but For Units with E Temp
6	2	03232.00	1/8 Male Plug
7	1	13669.21	Mixing Chamber SS
8	3	00742.00	Nipple Brass 1/2 x 1 1/2
9	1	13631.50	Plumbing Connection Plug
10	1	13644.00	EST Vacuum Breaker Conn.
11	1	13307.30	EST44/66 Final Rinse Tube Assy.
12	1	13631.00	Mixing Chamber Plumbing Connect

ITEM NO.	NO. REQ'D	P/N	DESCRIPTION
13	1	00120.02	Bi Metal Thermometer
14	1	03603.15	1/2" Water Solenoid Valve 220V, JE*
15	1	00707.00	1/2" Water Solenoid Valve Repair Kit
16	1	00786.00	Water Solenoid Plunger with Spring
17	1	03603.20	1/2" Water Solenoid Valve Bonnet
18	1	00738.15	Water Solenoid Valve Coil, 220V, ¾" &1/2"
19	1	13604.00	1/2 x 1/4 Bushing Brass
20	1	13605.45	Pressure Gauge (CMA-180)
21	3	00745.00	1/2 90 Deg Street Elbow
22	1	13602.20	1/2" Pressure Regulator
23	1	01525.06	Plumbing Support Bracket
24	3	13629.00	Nipple SS 1/2 x Close
25	2	01526.10	Plumbing Bracket Strap
26	4	00912.00	¼-20 Nylon Lock Nut
27	4	00912.00	¼-20 Nylon Lock Nut

1.2.12. Wash System Assembly

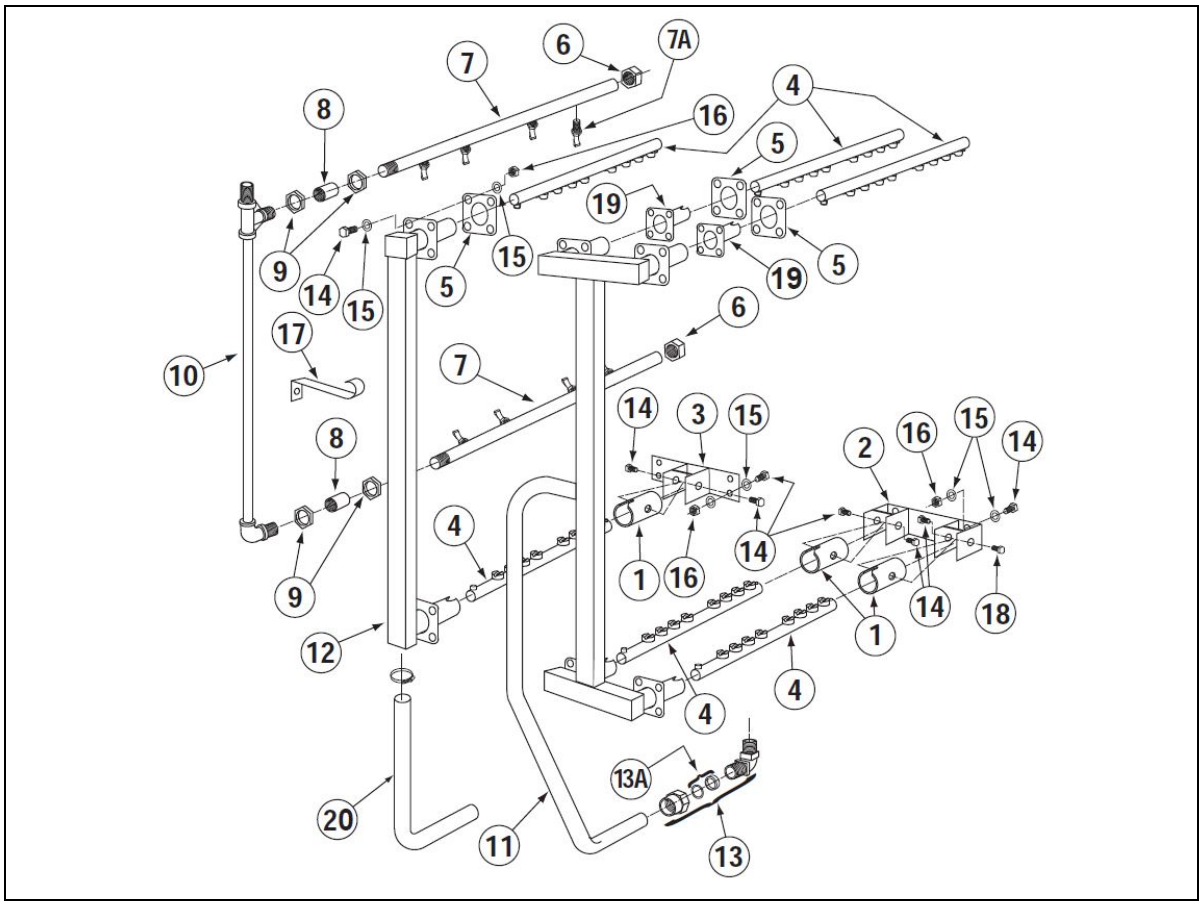

ITEM NO.	NO. REQ'D	P/N	DESCRIPTION
1	6	13305.06	Spray Arm End Cap
2	2	13327.06	Socket Bracket, Double
3	2	13327.26	Socket Bracket, Single
4	6	13303.17	Spay Arm
5	6	04306.00	Square Manifold Gasket
6	2	13310.00	1/2" Cap, Brass
7	2	13304.83	Final Rinse Spay Arm*
7A	8	13304.66	Final Rinse Spray Jets, SS
8	2	13618.00	1/2" Coupling
9	4	00721.20	1/2" Jamb Nut, Brass
10	1	13307.30	EST44/66 Final Rinse Tube Assy.
11	1	13301.16	Wash Manifold 03/15

ITEM NO.	NO. REQ'D	P/N	DESCRIPTION
12	1	13301.39	Rinse Manifold
13	1	00213.00	1" Ford Adapter, MIP x PJ Tube**
13A	1	00225.00	1" Compression Gasket
14	36	0914.10	1/4-20 x 5/8 Hexhead Bolt 304SS
15	36	00924.00	1/4" SS Washer
16	36	00912.00	1/4-20 Nylon Lock Nut
17	1	13304.53	Long Support Bracket
18	12	13305.40	Shoulder Bolt
19	2	13306.06	Manifold Spray Arm Socket
20	1	03108.66	Transfer Hose 1" – 35"

1.2.13. Rocker Arm Assembly

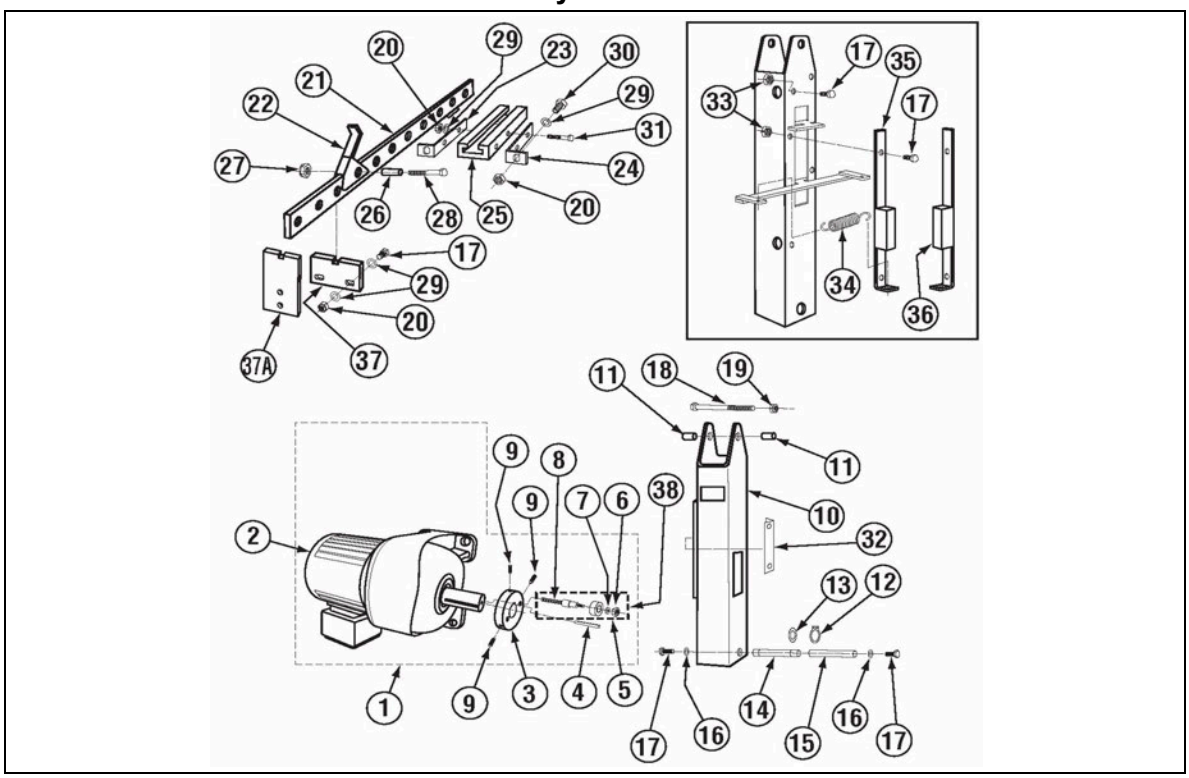

ITEM NO.	NO. REQ'D	P/N	DESCRIPTION
1	1	13571.00	EST Conveyor Drive Assy.3ph,230V
		13571.25	EST Conveyor Drive Assy.1ph,230V
2	1	13503.06	EST-44 Gearbox Motor Assy.3ph,230V
		13503.08	EST-44 Gearbox Motor Assy.1ph,230V*
3	1	13505.14	EST-44 Drive Cam
4	1	13505.22	Keyway (Cam)
5	1	13507.20	Cam Bearing Only
6	1	13805.00	5/16-18 Nylon Insert Lock Nut
7	1	13507.11	Cam Bearing Shaft Spacer
8	1	13507.12	Cam Bearing Shaft
9	3	00935.22	1/4-20 x 1/2" Set Screw
10	1	13508.12	CMA 44 Rocker Arm
11	2	13513.10	Rocker Arm Spacer
12	2	13509.52	7/8" ID External Lock Ring
13	2	13509.53	1" ID Brass Washer
14	1	13509.12	CMA 44 Rocker Shaft Bearing
15	1	13510.10	Bearing Shaft
16	2	00922.00	1/4" Lock Star Washer
17	4	00914.00	1/4-20 x 3/4" Hex Head Bolt
18	1	13808.00	1/2-13 x 3-1/2"
19	1	13809.00	1/2-13 Nylon Lock Nut

ITEM NO.	NO. REQ'D	P/N	DESCRIPTION
20	1	00912.00	1/4-20 Nylon Lock Nut
21	1	13514.87	Conveyor Bar (11 Dogs)
22	11	13515.00	Conveyor Dog, SS
23	1	13514.82	Left Conveyor Bar Bracket
24	1	13514.84	Right Conveyor Bar Bracket
25	1	13521.50	Conveyor Bar Slide Bearing
26	11	13520.00	Conveyor Dog Bearing
27	11	13806.00	3/8" Nylon Lock Nut
28	11	13818.00	3/8-16 x 1-3/4" Hex Head Bolt
29	2	00924.00	1/4" SS Washer
30	2	00914.10	1/4-20 x 5/8" Hex Head Bolt
31	1	00903.00	1/4-20 x 1-3/4" Hex Head Bolt
32	1	13505.06	Cam Guide
33	4	00912.00	1/4-20 Nylon Lock Nut**
34	1	13508.70	Heavy Duty Clutch Spring
35	1	13508.22	Rack Saver Clutch Bar L>R (2 Spring)
36	1	13508.28	Rack Saver Clutch Bar R>L (2 Spring)
37	1	13522.00	Conveyor Bar Guide Starting 11/02
37A	1	13522.10	Conveyor Bar Guide Starting 01/11
38	1	13507.65	Cam Bearing Assy. (12/07)

* Comes with capacitor P/N 13503.03

1.2.14. Start Switch and Rinse Switch Assembly (Effective May 2014)

1.2.14.1. Right-to-Left Assembly

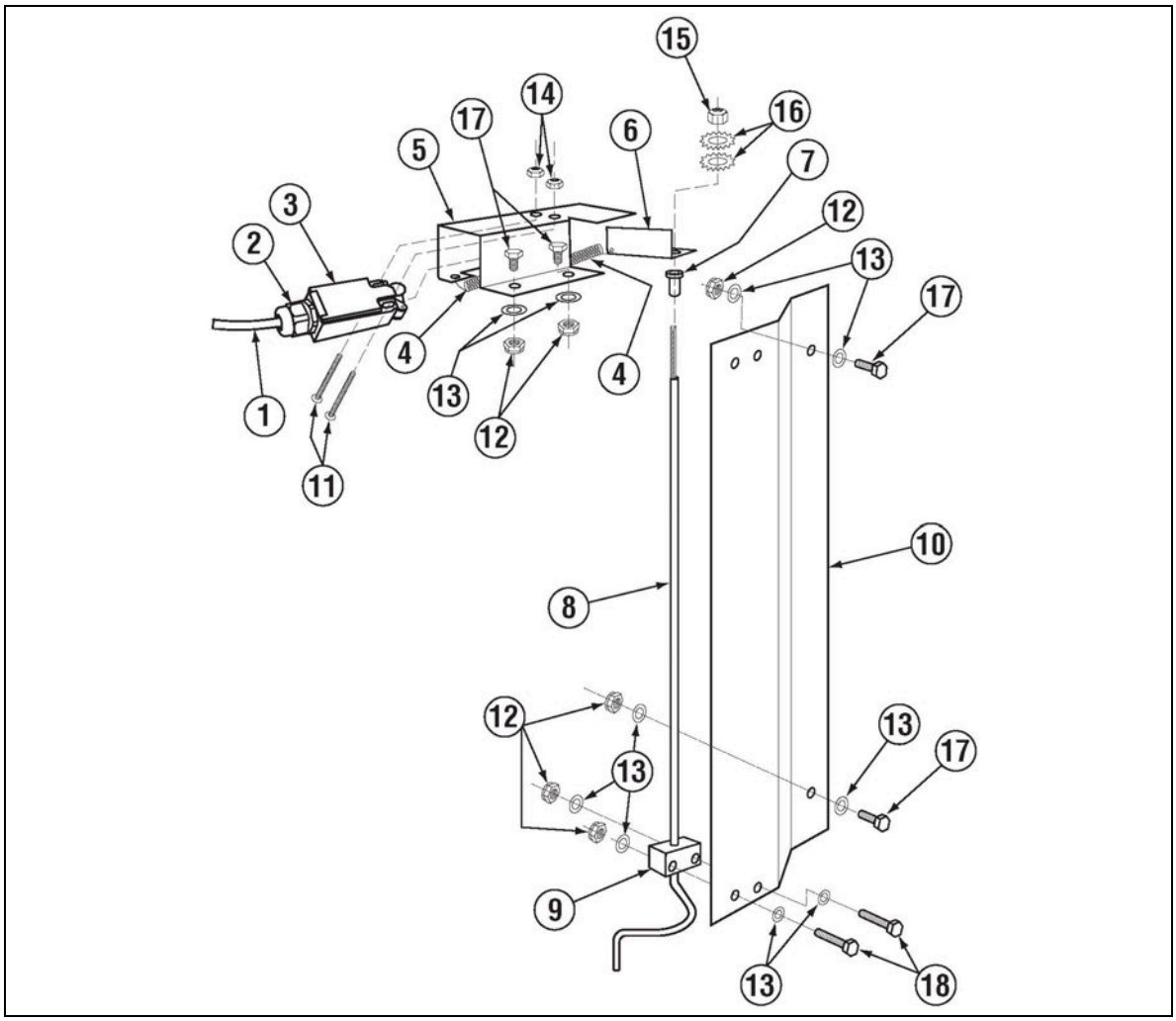

ITEM NO.	NO. REQ'D	P/N	DESCRIPTION
1	8'	00547.00	Switch Cord 18 AWG SOOW
2	2	00562.60	Connector-#562 Door Roller Switch
3	2	00562.00	Roller Door Switch
4	2	13408.64	Table Limit Switch Bracket Spring
5	2	13975.00	Conveyor Switch Housing R-L
6	2	13976.00	Conveyor Switch Activator Brkt R-L
7	2	13972.10	Conveyor Switch Rod Sleeve
8	2	13972.00	Conveyor Switch Rod R-L
9	2	13974.00	Conveyor Switch Rod Block UHMW

ITEM NO.	NO. REQ'D	P/N	DESCRIPTION
10	1	13973.00	Final Rinse Rod Shield (final rinse only)
11	2	00960.00	8-32 X 1 1/2 Panhead Screw
12	10	00912.00	1/4-20 Nylon Lock Nut
13	20	00926.00	5/16 SS Washer
14	4	00927.00	8-32 Nylon Lock Nut
15	2	00913.00	5/16-18 SS Nut
16	4	03807.30	5/16 External Lock Washer
17	6	00914.10	1/4-20 x 5/8 Hexhead Bolt 304SS
18	4	00910.00	1/4-20 x 1 1/2 SS Hexhead Bolt

1.2.14.2. Left-to-Right Assembly

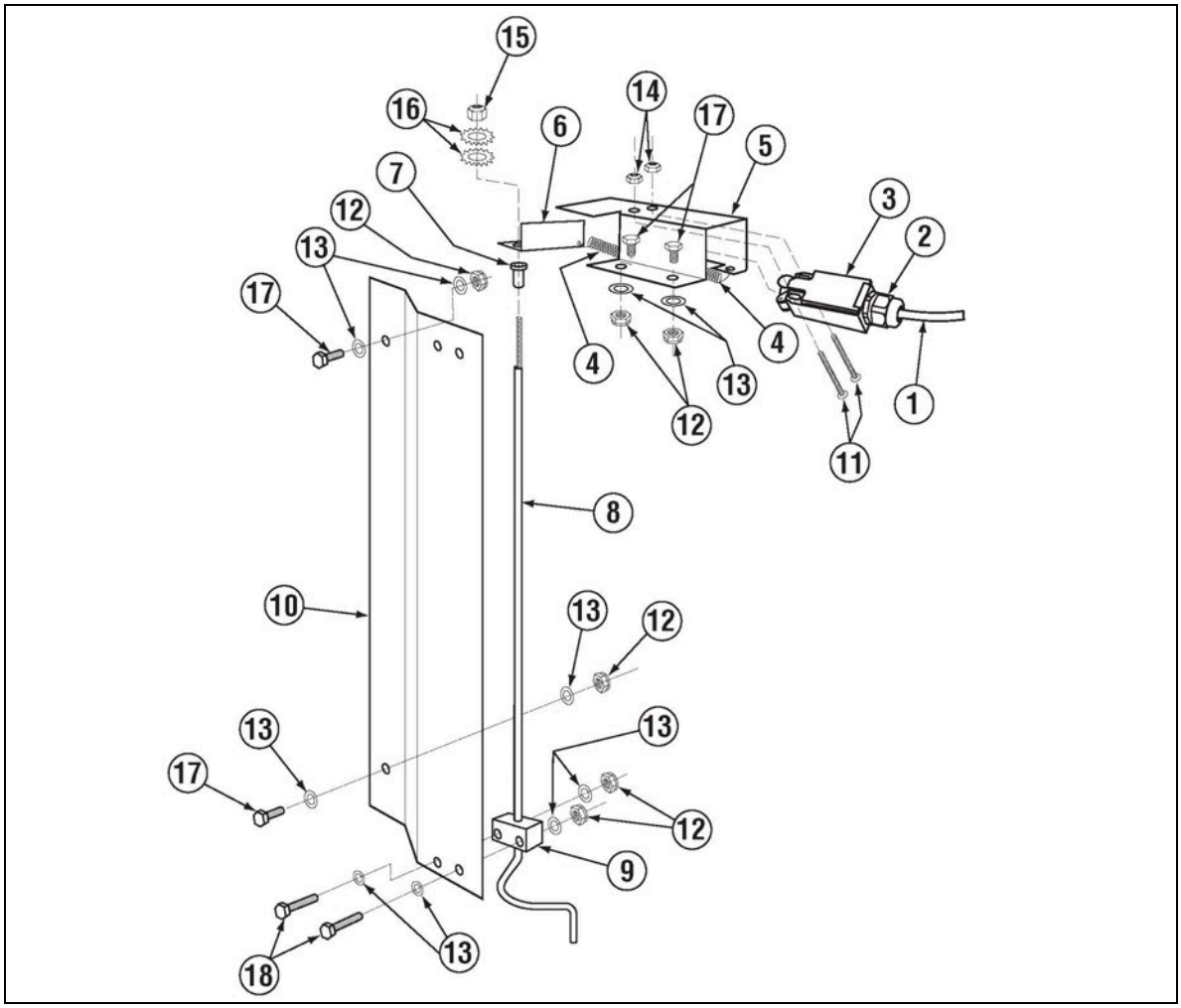

ITEM NO.	NO. REQ'D	P/N	DESCRIPTION
1	8'	00547.00	Switch Cord 18 AWG SOOW
2	2	00562.60	Connector-#562 Door Roller Switch
3	2	00562.00	Roller Door Switch
4	2	13408.64	Table Limit Switch Bracket Spring
5	2	13975.50	Conveyor Switch Housing L-R
6	2	13976.50	Conveyor Switch Activator Brkt L-R
7	2	13972.10	Conveyor Switch Rod Sleeve
8	2	13972.50	Conveyor Switch Rod L-R
9	2	13974.00	Conveyor Switch Rod Block UHMW

ITEM NO.	NO. REQ'D	P/N	DESCRIPTION
10	1	13973.00	Final Rinse Rod Shield (final rinse only)
11	2	00960.00	8-32 X 1 1/2 Panhead Screw
12	10	00912.00	1/4-20 Nylon Lock Nut
13	20	00926.00	5/16 SS Washer
14	4	00927.00	8-32 Nylon Lock Nut
15	2	00913.00	5/16-18 SS Nut
16	4	03807.30	5/16 External Lock Washer
17	6	00914.10	1/4-20 x 5/8 Hexhead Bolt 304SS
18	4	00910.00	1/4-20 x 1 1/2 SS Hexhead Bolt

1.2.15. Start Switch and Rinse Switch Assembly

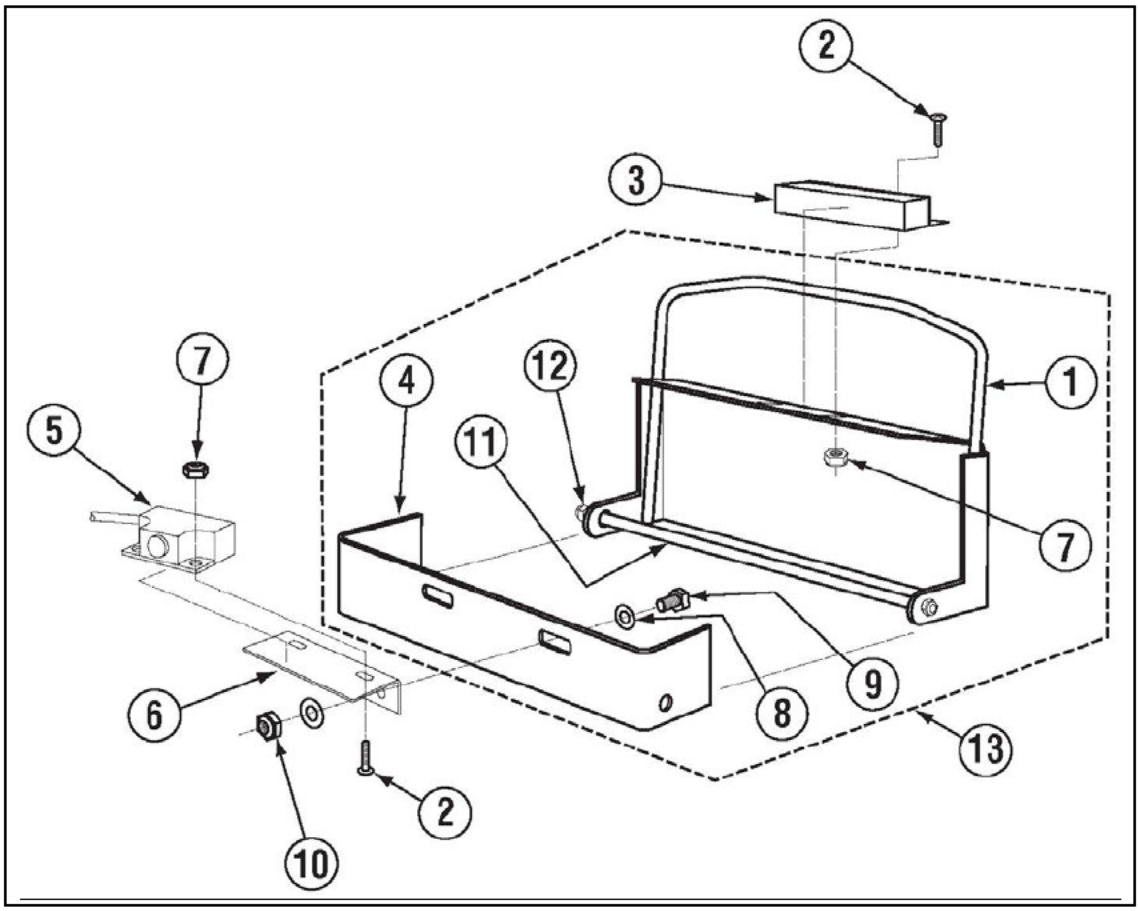

ITEM NO.	NO. REQ'D	P/N	DESCRIPTION
1	1	13408.61	Actuator Arm
2	4	00907.50	6-32 x 3/8" Pan Head Screw
3	1	00556.60	Reed Switch Magnet-ISI
4	1	13408.62	Actuator Bracket
5	1	00556.10	Reed Switch-ISI
6	1	13409.31	Reed Switch Bracket
7	4	00965.00	6-32 Nylon Lock Nut
8	4	00924.00	¼" SS Washer
9	4	00906.00	¼" –20 x ½" Hex Head Bolt
10	4	00912.00	¼" – 20 Nylon Lock Nut
11	1	13408.59	Actuator Arm Shaft
12	2	13805.00	5/16" Nylon Lock Nut
13	1	13408.60	Actuator Assy.

1.2.16. Door Switch Assembly (Effective August, 2014)

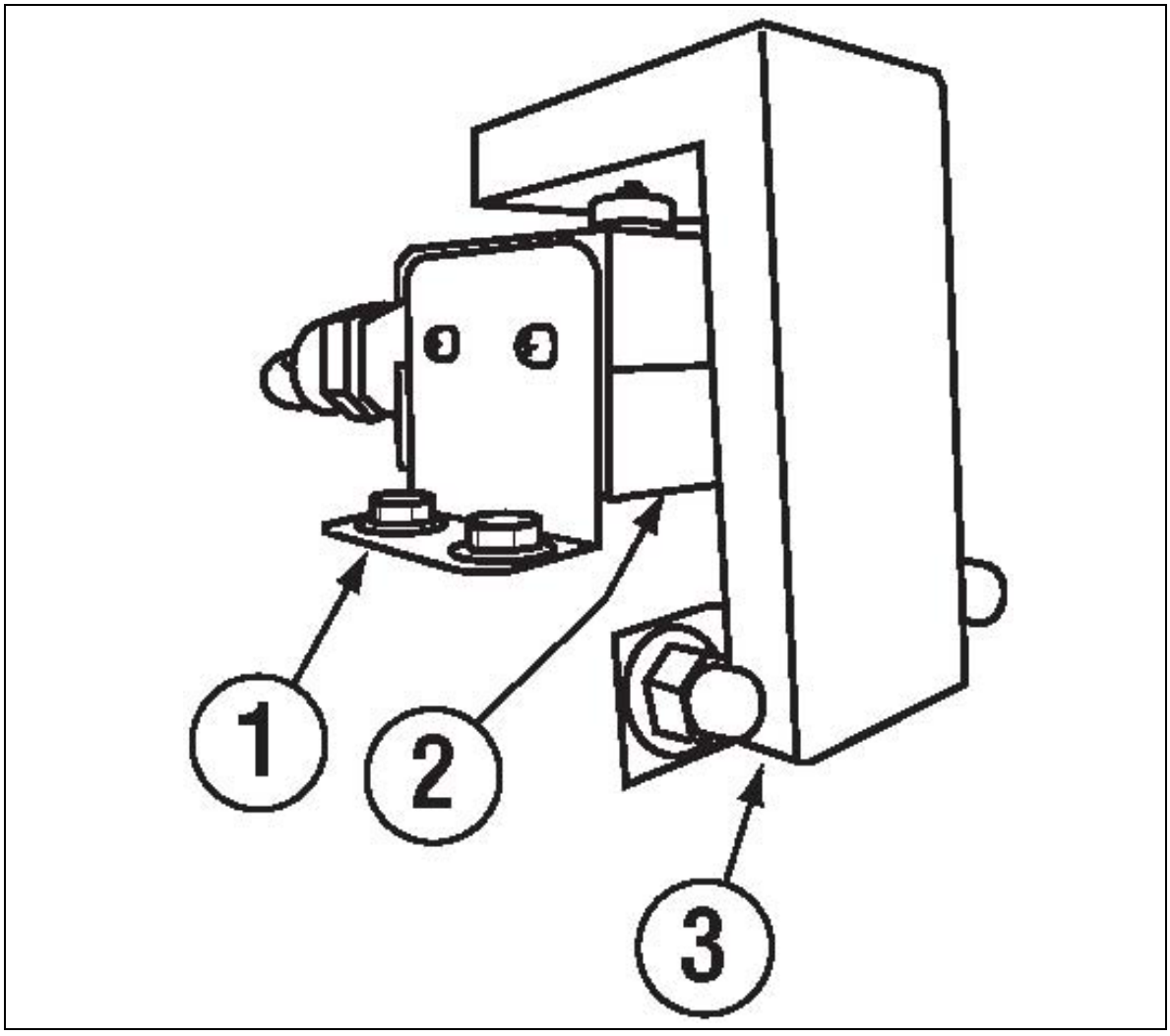

ITEM NO.	NO. REQ'D	P/N	DESCRIPTION
1	1	00471.87	Est44/66 Door Safety Switch Brkt
2	1	13427.10	Table Limit Switch (Push Button)
3	1	00471.88	Est44/6 Door Switch Actuator Bracket

1.2.1. Optional E-Temp Heater (Effective September 1, 2018)

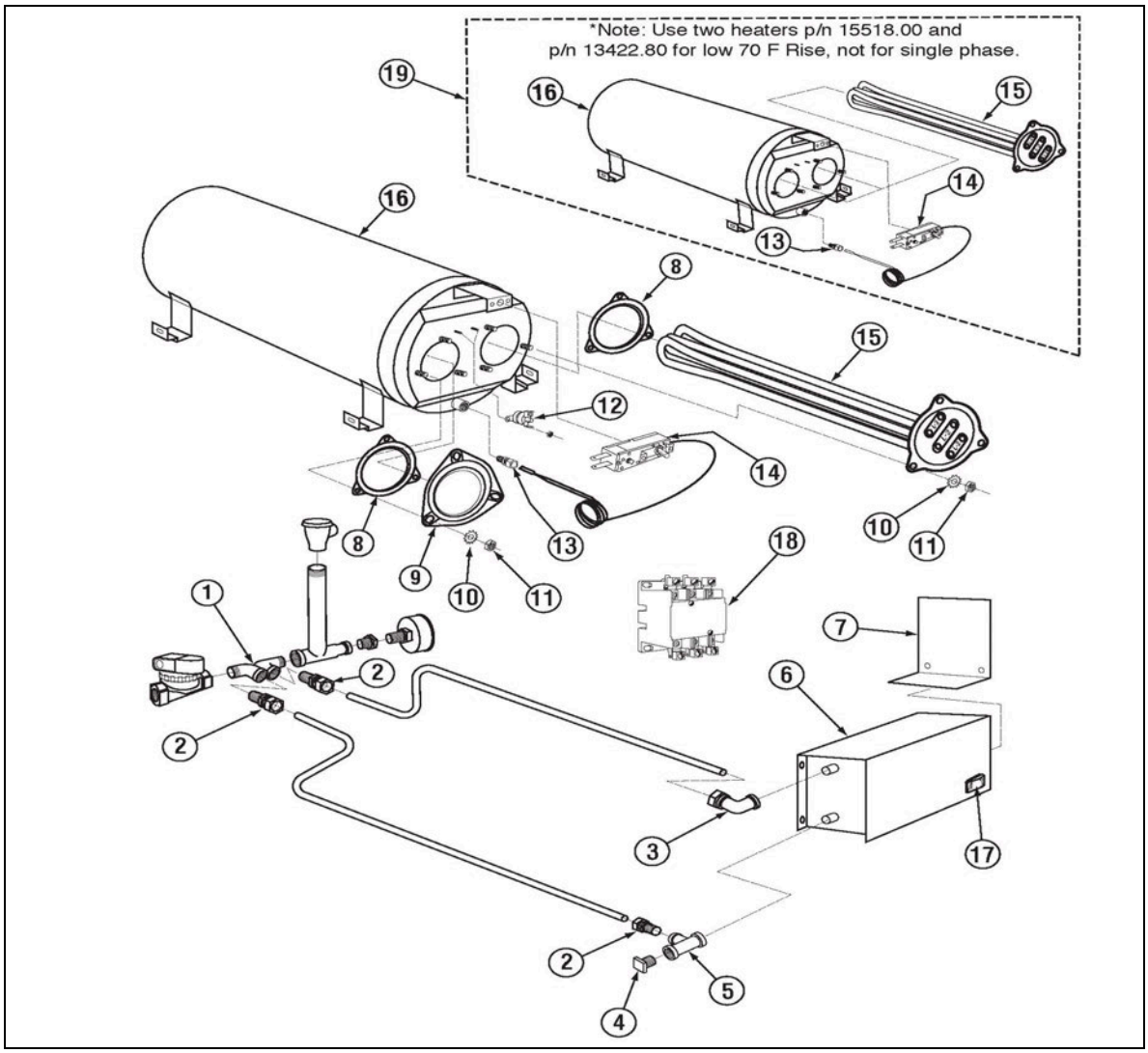

ITEM NO.	NO. REQ'D	P/N	DESCRIPTION
1	1	13620.20	Booster Heater 1/2 In/Out Adapter
2	3	00760.00	5/8 Comp x 1/2 MIP Adapter
3	1	17550.10	Inlet Booster Heater Plumbing Connt
4	1	13642.00	1/2" MIP Plug Brass Sq. Head
5	1	00743.10	1/2 Tee F x F x F Brass
6	1	13951.10	E-Temp Booster Shroud - Zoppas
7	1	13951.12	E-Temp Booster Access Cover
8	2	15518.11	Gasket for Triangular Flange Heater
9	1	13950.20	E-Temp Tank Plug for 40F Rise.
10	6	00924.00	1/4 SS Washer

ITEM NO.	NO. REQ'D	P/N	DESCRIPTION
11	6	00912.00	1/4-20 Nylon Lock Nut
12	1	17523.51	Hi Limit Switch 250Deg
13	1	40116.00	1/4 Comp x 1/4 MIP Ftg
14	1	13417.89	Heater Thermostat
15	1	13422.71	240V 12kW Trianguler Immersion Htr*
16	1	13951.20	E-Temp Heater Tank
17	1	00421.83	Power Rocker Switch, Red
18	1	13003.17	Contactor 60 Amp 3 Pole
19	1	13951.70	E-Temp Assy 40Deg Rise
19	1	13951.60	E-Temp Assy 70Deg Rise

* Note : Use two heaters p/n 15518.00 (6kW) and 13422.80 (10kW) for 70 F Rise., not for single phase.

1.2.2. Optional E-Temp Heater

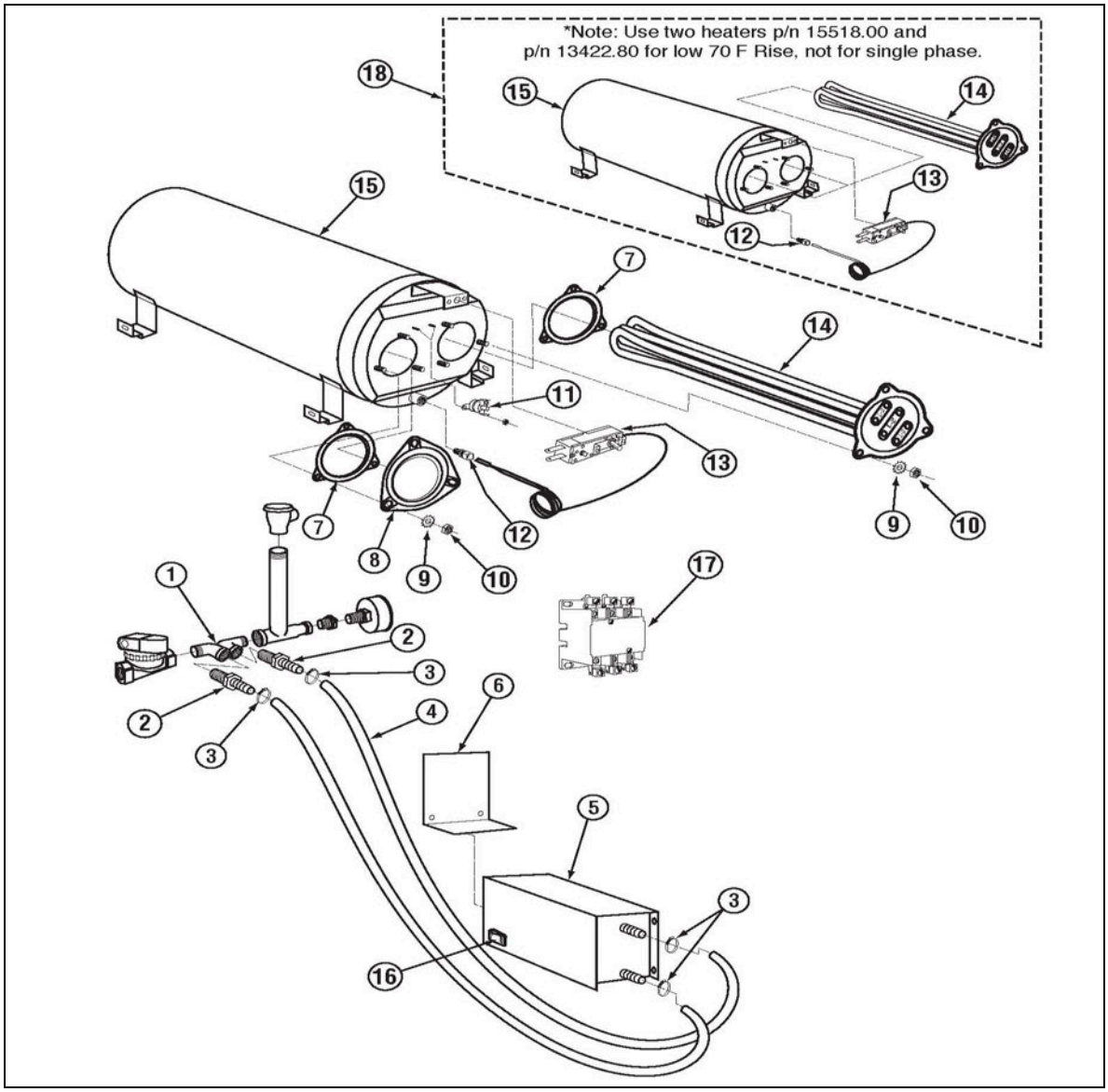

ITEM NO.	NO. REQ'D	P/N	DESCRIPTION
1	1	13620.20	Booster Heater 1/2 In/Out Adapter
2	2	40014.00	1/2m x 1/2 Barb Straight
3	4	03101.47	Hose Clamp # 6 size # 003
4	2	03107.62	Flexible Hose 1/2" X5 Ft
5	1	13951.10	E-Temp Booster Shroud - Zoppas
6	1	13951.12	E-Temp Booster Access Cover
7	2	15518.11	Gasket for Triangular Flange Heater
8	1	13950.20	E-Temp Tank Plug for 40F Rise.
9	6	00924.00	1/4 SS Washer

ITEM NO.	NO. REQ'D	P/N	DESCRIPTION
10	6	00912.00	1/4-20 Nylon Lock Nut
11	1	17523.51	Hi Limit Switch 250Deg
12	1	40116.00	1/4 Comp x 1/4 MIP Ftg
13	1	13417.89	Heater Thermostat
14	1	13422.71	240V 12KW Triangular Immersion Htr*
15	1	13951.20	E-Temp Heater Tank
16	1	00421.83	Power Rocker Switch, Red
17	1	13003.17	Contactor 60 Amp 3 Pole
18	1	13951.60	E-Temp Tank Assy 70Deg Rise

* Note : Use two heaters p/n 15518.00 and 13422.80 for 70 F Rise., not for single phase.

1.2.3. Unique Parts For EST-44 Tall machines.

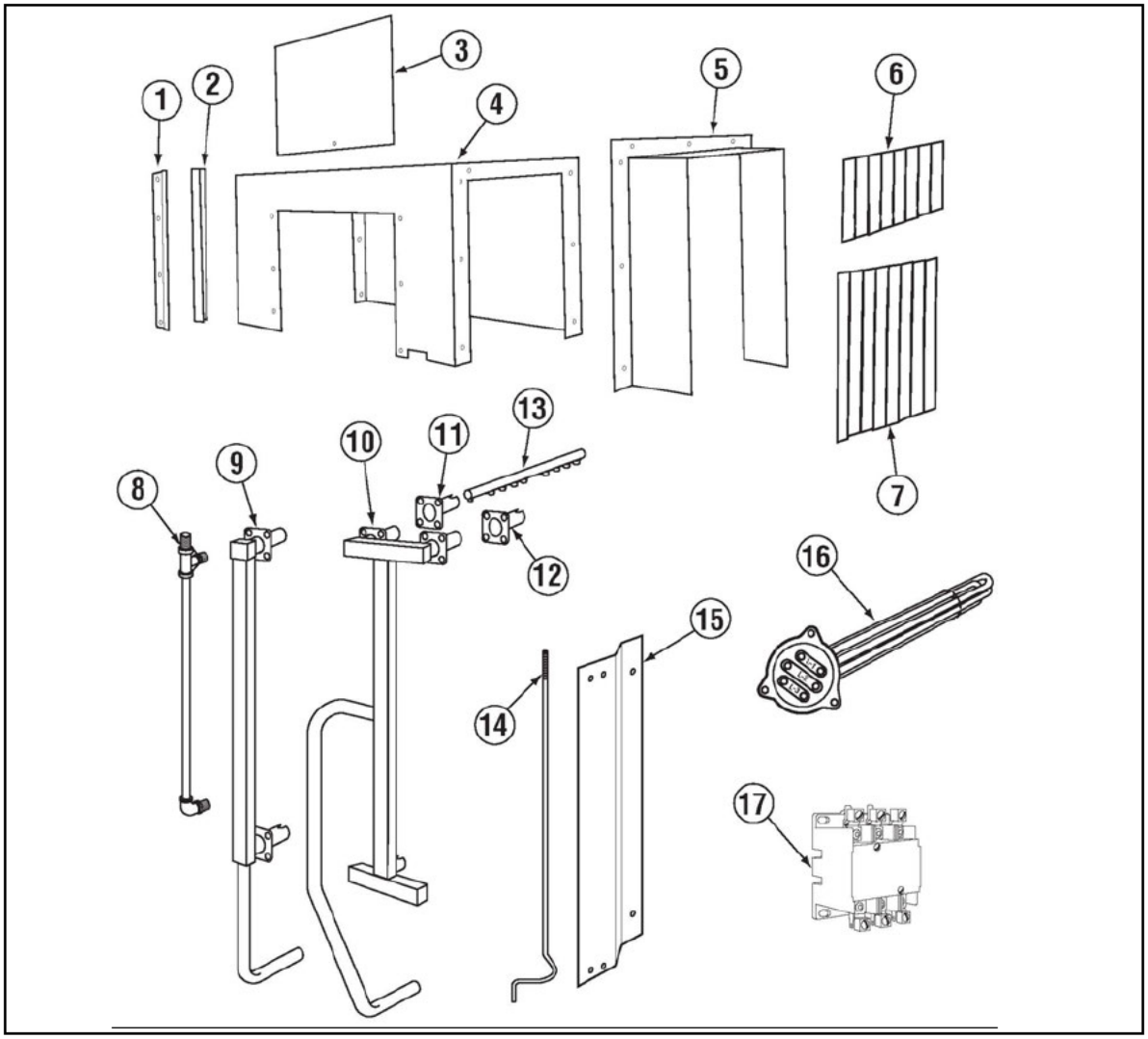

ITEM NO.	NO. REQ'D	P/N	DESCRIPTION
1	2	13936.50	Conveyor Door Guide 6" Taller
2	2	00636.30	EZ Glide Door Guide 32 1/4"
3	1	13936.00	Conveyor Door 6" Taller
4	1	13935.00	EST- 44 Wrapper L-R 6" Taller
	1	13935.50	EST- 44 Wrapper R-L 6" Taller
5	2	13938.00	Conveyor Wrapper Shield 6" Taller
6	1	13702.30	Curtain CMA-44 24 5/8" x 15
7	2	13703.61	Curtain CMA-44/66 20 5/8 x 21
8	1	13307.32	^EST-44/66 Final Rinse Tube Tall
9	1	13937.57	Conveyor Rinse Mani L-R 6" Taller
	1	13937.58	Conveyor Rinse Mani R-L 6" Taller

ITEM NO.	NO. REQ'D	P/N	DESCRIPTION
10	1	13938.16	Conveyor Wash Manifold Tall 03/16
11	1	13301.35	Upper Wash Arm Socket Left Tall
12	1	13301.36	Upper Wash Arm Socket Right Tall
13	6	13303.26	^Spray Arm CMA-44P (Special) .175
14	2	13972.60	Conveyor Switch Rod L-R Tall
	2	13972.20	Conveyor Switch Rod R-L Tall
15	1	13973.50	Final Rinse Rod Shield Tall
16	1	13422.84	Immersion Heater 15Kw 208V T-Flange
17	1	13003.17	Contactor 60 Amp 3 Pole

Buy Parts

2. Table Limit Switch (P/N 13469.20)

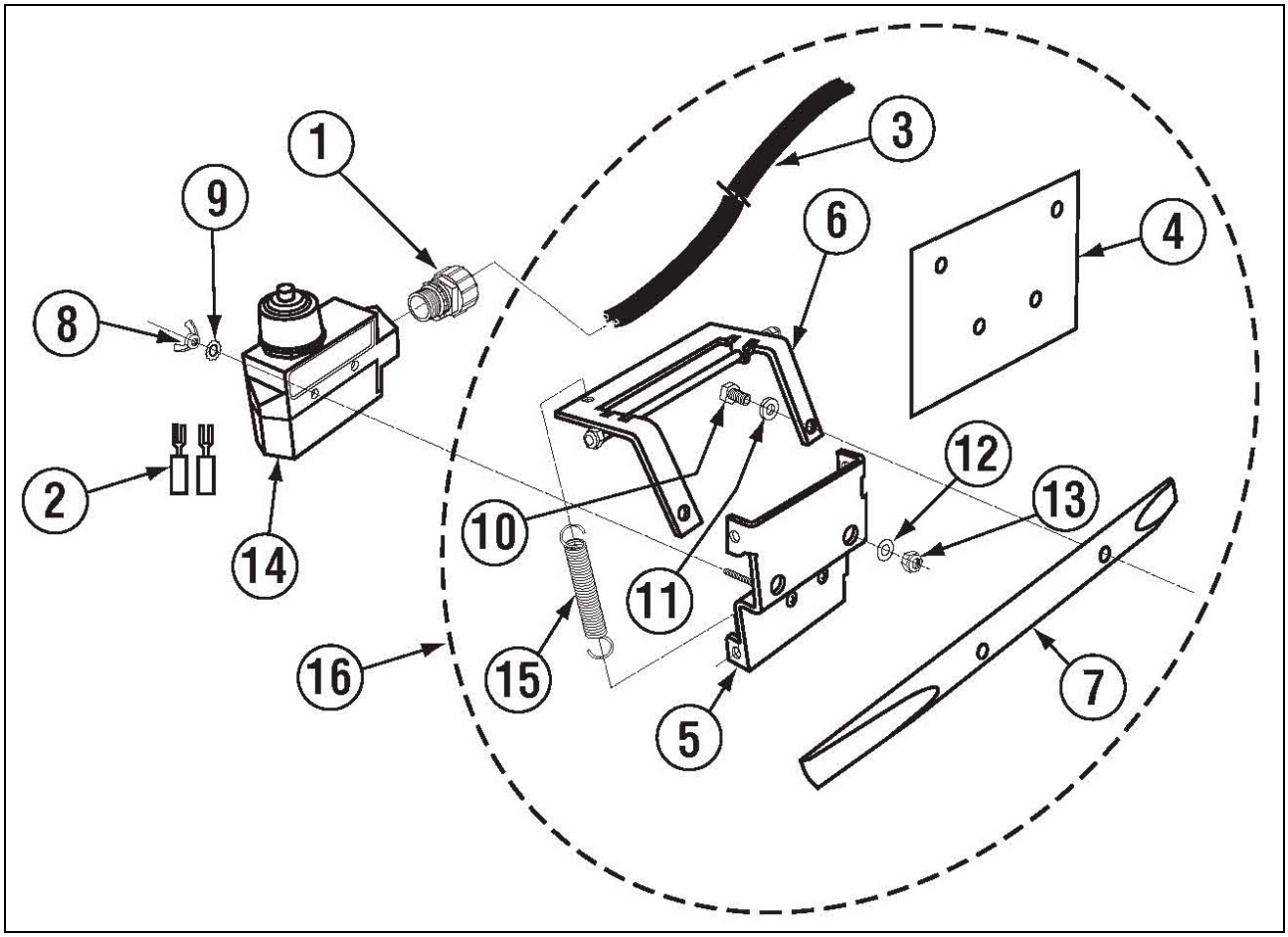

ITEM NO.	NO. REQ'D	P/N	DESCRIPTION
1	1	13427.12	Connector for Table Limit Switch
2	2	00446.60	Ring Eyelet Connector 14-16 #8
3	14 FT	00547.00	Switch Cord 18 AWG SOOW
4	1	13427.60	Template kit
5	1	13427.61	Mounting bracket
6	1	13427.62	Actuator
7	1	13427.63	Bumper
8	2	03817.00	6-32 wing nut
9	2	03814.10	Lock star washer
10	2	00914.10	1/4-20 x 5/8 hexhead bolt
11	2	00968.00	1/4 split lock washer
12	2	00924.00	1/4 ss washer
13	2	00912.00	1/4-20 nylon lock nut
14	1	13427.10	Limit switch
15	1	13408.64	Switch Bracket Spring
16	1	13427.50	Table Limit Switch Bracket Ass'y

3. Drain Water Tempering Kit (Optional)

CMA-180, EST-44, EST-66
WATER TEMPERING VALVE KIT
P/N 13470.10

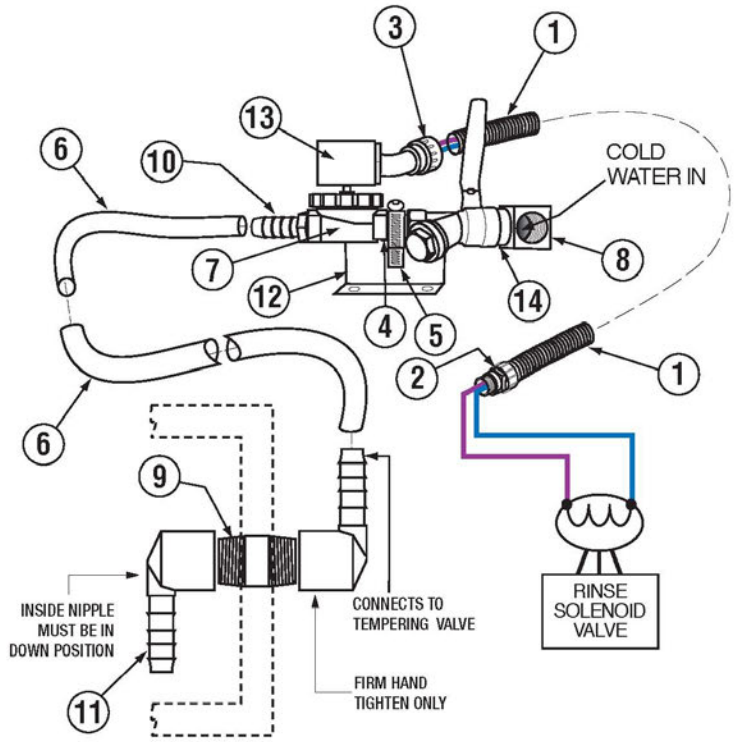

ITEM NO.	P/N	NO REQ'D	DESCRIPTION
1.	00400.00	2	CONDUIT 3/8" SEALTITE
2.	00401.00	1	ST-3/8" STRAIGHT CONNECTOR
3.	00402.00	1	ST-90 DEG 3/8" COONNECTOR
4.	00742.00	1	NIPPLE BRASS 1/2X1-1/2"
5.	03101.00	1	HOSE CLAMP #16 1"
6.	03106.45	5	BRAIDED HOSE 1/2"
7.	03603.15	1	WATER SOLENOID VALVE 1/2"
8.	41030.10	1	1/2" 90 DEG. ELL X F BRASS
9.	13472.00	1	NIPPLE PVC 1/2"X CLOSE
10.	13472.40	1	ADAPTER PVC 1/2" MALE X 1/2" BARB
11.	13472.50	2	ELBOW PVC 90 DEG F X BARB
12.	14508.50	1	PLUMBING BRACKET (180-UC)
13.	00738.15	1	SOLENOID VALVE COIL 220V
14.	41062.00	1	1/2" STRAINER BALL VALVE

2-2013

Drain Water Tempering Valve Assembly (Effective 03-2023)

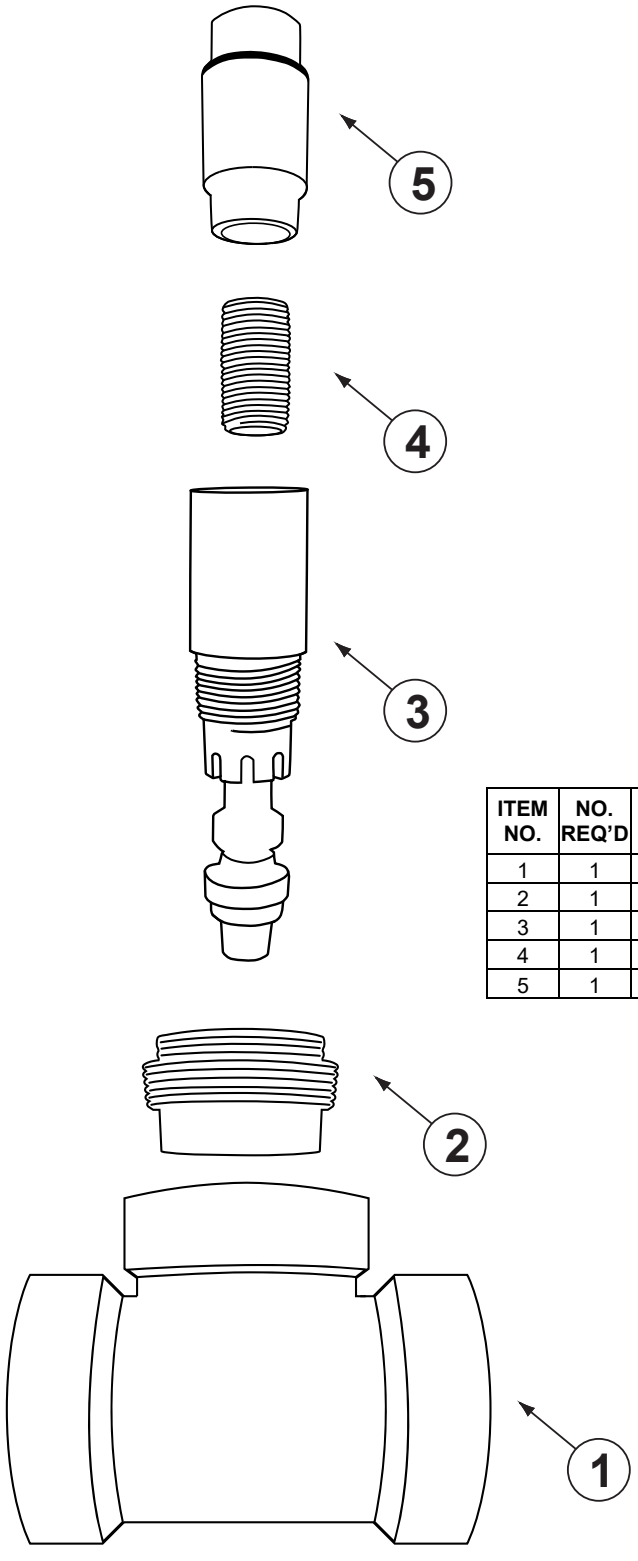

ITEM NO.	NO. REQ'D	P/N	DESCRIPTION
1	1	13470.88	2 ABS Tee S x S x MIP
2	1	13470.87	DTV Adapter 2" X 3/4"
3	1	13470.85	Drain Water Tempering Valve
4	1	00742.00	Nipple Brass 1/2 x 1-1/2
5	1	00715.00	1/2 Ball Check Valve